Made in United States of America
Reprinted from JOURNAL OF RANGE MANAGEMENT, Vol. 22, No. 5, September 1969
pp. 357–359

Air-Flow Planimeter for Measuring Detached Leaf Area[1]

H. F. MAYLAND

Research Soil Scientist, Snake River Conservation Research Center, Soil and Water Conservation Res. Div., ARS, USDA, Kimberly, Idaho.

Highlight

An apparatus has been designed and tested for measuring area of detached leaves of all shapes. The apparatus is easy to operate and gives accurate results rapidly. Measurement variability is generally less than 1%.

Leaf area in crops is the most changeable characteristic of all the elements connected with photosynthetic activity. It depends strongly on plant types, and crop density as well as on the supply of water and mineral nutrients. In turn, it greatly influences major productivity factors such as the absorption of radiant energy and the photosynthetic potential of crops. The ratio of leaf area to land area forms a useful index (LAI) in evaluating potential photosynthetic activity of crops.

A number of techniques for measuring leaf area have been used, such as visual or ocular evaluation of standing crops or detached leaves and comparison to photographic standards. Such methods may be rapid, but they lack precision. Other methods include mechanical and optical planimetering, length-breadth measurements, and gravimetric methods using leaves and traced or photosensitive impressions of leaf boundaries. These methods, while precise, are time consuming. Difficulty is also experienced in mounting leaves for planimetering.

Jenkins (1959) developed a simple technique for the direct measurement of leaf area. His air-flow planimeter consisted of two identically perforated plates mounted on an air-tight drum which was connected to a blower. The air pressure of the drum was determined when the sample plate was uncovered, leaves were placed on the plate and the reference plate was then uncovered sufficiently to return to the original air pressure. The exposed area on the measuring plate was then equal to leaf area. This paper describes design improvements in Jenkins' air-flow planimeter along with calibration techniques and possible errors in the leaf-area measurement.

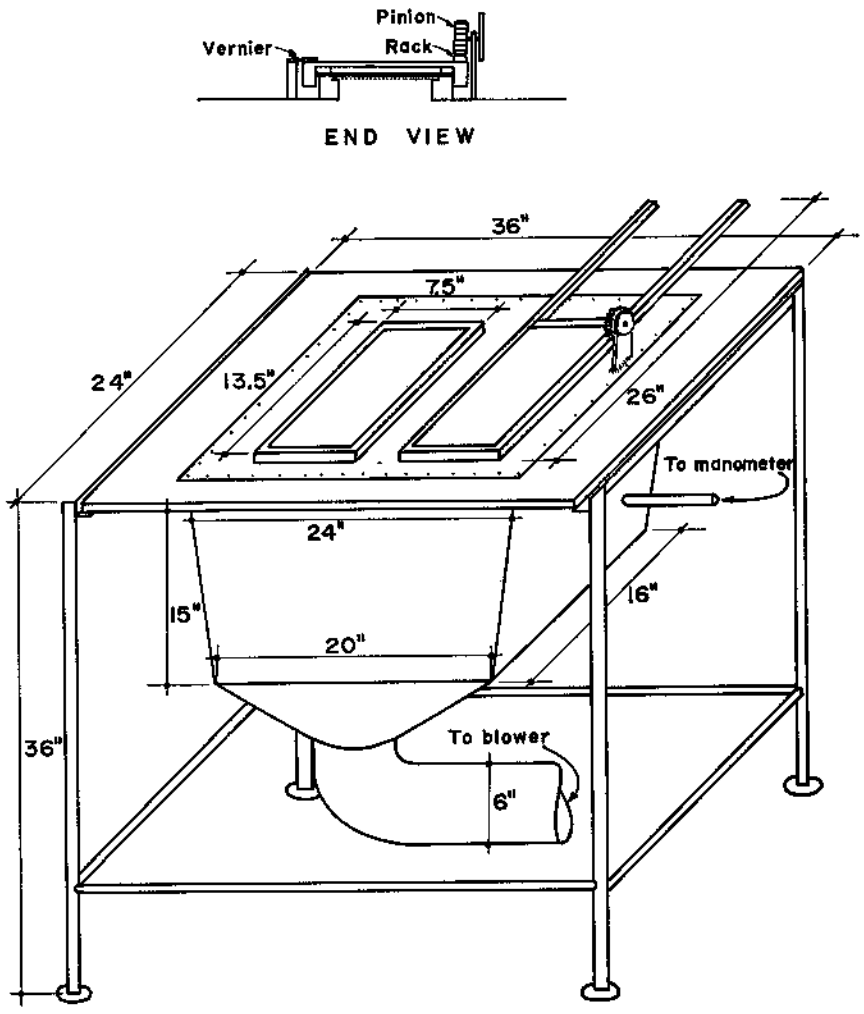

FIG. 1. Schematic drawing of the air-flow planimeter including end view of reference grid. See Jenkins (1959) for more details on the grid design.

Methods and Materials

The apparatus described in this paper consists of two matched porous grids (sample and reference) constructed of 200-mesh chromel screen mounted over a sealed chamber which is connected to an exhaust blower (Fig. 1). The reference grid is covered by a sliding plate with a vernier scale on one edge. The differential air pressure between the inside of the chamber and the room is measured with an inclined manometer while the reference grid is closed. Leaves are mounted on the sample grid and the reference grid is then opened to adjust the manometer reading to its former value. The exposed area of the reference grid is equal to the total surface area of the leaves on the sample grid. The leaf area may be determined directly from the vernier scale.

Materials List[2]

1. Blower to deliver approximately 600 cubic feet of air per minute at datum pressure of 4.0 inches of water. A Dayton blower No. EC570 with 10⅝-inch-diameter wheel operating at 3450 rpm and powered by 1.5 hp a.c. capacitor motor meets these specifications.

[1] Contribution from the Northwest Branch, Soil and Water Conservation Research Division, ARS, USDA and Idaho Agricultural Experiment Station, cooperating. Received April 14, 1969; accepted for publication May 7, 1969.

[2] Trade names are included for the benefit of the reader and do not imply any endorsement or preferential treatment of the product listed by the United States Department of Agriculture.

Purchased By Agricultural Research Service, U.S. Department of Agriculture for Official Use.

2. Manometer (30–36 inches in length) inclined at approximately 0.06: 1.0, 20 inches of 3/16-inch ID rubber tubing and manometer fluid: i.e., water or red indicating fluid such as D-3166 from Meriam Instrument Co., Cleveland, Ohio.

3. Sixteen square feet of 24 gauge and 4 square feet of 18 gauge galvanized sheet metal.

4. Plywood, 2 feet × 3 feet × ¾ inch.

5. Ten feet of ¾ × ¾ inch angle iron.

6. Brass bar, ¼ × ¾ × 168 inch or equivalent for grid frames.

7. One hundred eighty square inches of 200-*mesh* chromel or steel cloth or similarly perforated screen.

8. Twenty-two feet of ¾-inch pipe for legs and lower frame supports.

9. Two feet of 6-inch-diameter duct, including 90-degree elbow.

10. Rack, ⅜ inch × 11 inch and appropriate pinion.

11. Electrical switch box, necessary wiring and connectors to safely conduct current to the electric motor.

12. One square foot of ⅜-inch plexiglass.

13. Four to 6 mil polyethylene film, and ⅛- × ¼- × 24-inch rubber strip to form airtight seal on reference grid. See Jenkins (1959) for construction specifications of grids.

14. Small wood screws.

Results and Discussion

The air-flow planimeter was calibrated by using simulated leaves of known area. These simulated leaves varied in dimensions and shapes in order to test the planimeter response to leaf areas of different plants. Calibration curves such as the one given in Figure 2, may be conveniently developed for the air-flow planimeter. The linearity of the data ($r^2 = 0.999$) indicates the uniform response of the apparatus to a wide range of leaf areas.

The air-flow planimeter has three distinct advantages over other methods commonly used. First, error is less than 1% when half of the specimen grid is occupied by sample material. This error decreases as the sample size increases. The error is larger than 1% for small samples. The second advantage is that samples can be handled rapidly—approximately one-half to ten minutes per sample—depending on size, shape and number of leaves per sample. Third, leaves are firmly pressed against the grid because of the slight negative pressure (< 0.002 atmosphere) beneath it. The need to rearrange leaves, as is frequently necessary with photometric or tracing techniques, is thereby eliminated.

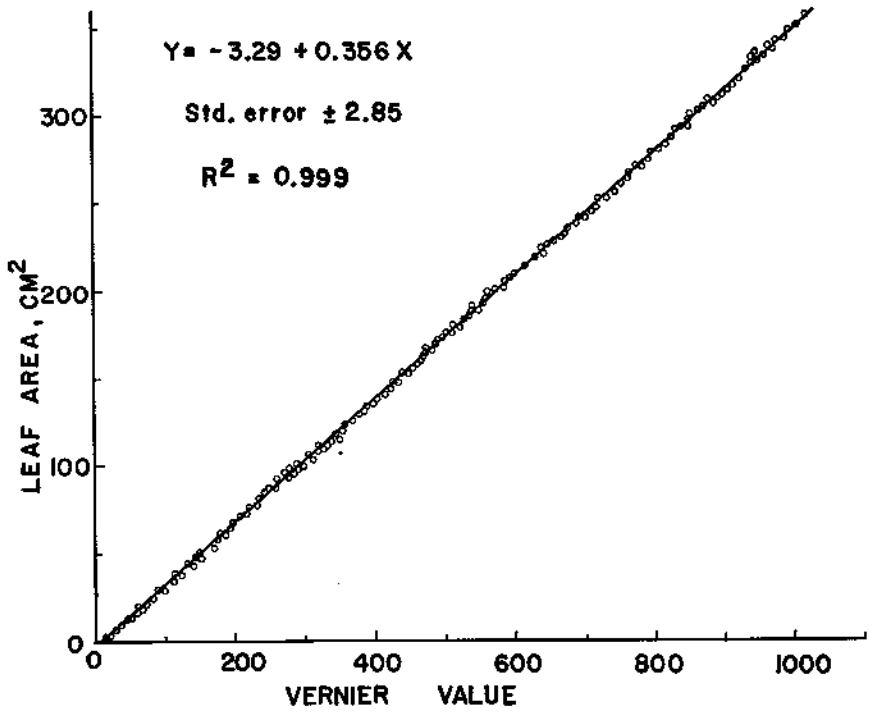

FIG. 2. Calibration curve of leaf area vs. vernier value for the air-flow planimeter.

Several potential measurement errors associated with the air-flow planimeter were evaluated. These include grid boundary conditions resulting from sample positioning, passage of air through leaves (particularly those with open stomates), shrinkage of leaves caused by severe dehydration during the measurement process, leaves with curved or rough edges, changes in bulk air-flow rate by the blower or changes in porosity of the sample and reference grids.

Boundary conditions on the sample grid were evaluated by placing 0.5- by 10-inch paper strips first along the edges of the grid-screen; second, in an alternating skip-strip pattern; and third, abutted together on the sample grid. In no case were significant manometric differences observed for the various positions.

A second source of error would be caused by differences in the permeability of leaves. Leaves with open stomates could be more permeable than those with closed stomates. This difference would result in underestimating leaf area. Area measurements were made of leaves from a number of plants, including the common bean (*Phaseolus vulgaris*), having open stomates. Manometric responses were not observed when the leaf surfaces were sealed with masking tape or coated with paraffin. Reported values of diffusive resistance further verify that the passage of air through the leaf, even with open stomates, does not contribute significantly to the total error under these conditions.

Shrinkage of leaves due to dehydration was also evaluated. Such a problem could occur because a large volume of air passes by the leaf during the measurement. Fully turgid leaves were placed on the sample grid and manometric readings were made at 10-minute intervals. No significant changes were observed even after 40 minutes of continuous air flow. Shrinkage is not, therefore, a contributing error to the area measurement of most leaves. Some leaves might exhibit significant shrinkage in time; however, the rapidity of measurement using the air-flow planimeter would certainly minimize this problem.

Leaf irregularity causes problems in accurately measuring area by most of the presently known techniques. The

rolling or folding of leaf edges is well illustrated on the leaf lobes of the potted geranium (*Pelargonium* sp.). Area measurement under these conditions has been facilitated by separating the lobes from the leaf and then laying all the pieces on the sample grid. Curved or boat-shaped leaves may be divided at the midleaf to allow pieces to flatten on the sample grid. Area measurement of leaves with very small rolls occurring on the leaf edge poses a real problem. Research workers making leaf-area measurements on leaves of this type may wish to consider other means of reducing this source of error.

Errors in leaf-area measurement attributable to the mechanical features of the air-flow planimeter were also evaluated. Slight fluctuations in blower speed can occur and these certainly contribute to the small error discussed earlier. This source of error can be eliminated by using a d.c. induction motor (described by Jenkins, 1959) instead of the a.c. capacitor motor used in the apparatus described in this paper. The induction motor is many times more expensive and this added cost may not be justified by the partial reduction of a 1% error in leaf area measurement.

Entrapment of particulate matter on the porous grid is a potential source of error. Care should be taken to locate the air-flow planimeter in a dust-free area. Much of the material may be fluff, which can be removed once the blower is stopped. This problem would be reduced if the grids had a larger pore diameter. But the larger pore size in the punched plate described by Jenkins (1959) may result in lower precision of area measurements on small or narrow leaves. The researcher may wish to select grid material with pore sizes and pore densities somewhere between those described by Jenkins and those used by this author.

The porous material selected for the grids should be uniform so that the nonporous area under a leaf sample is proportionate to the nonporous area of the exposed reference grid.

LITERATURE CITED

JENKINS, H. V. 1959. An air-flow planimeter for measuring the area of detached leaves. Plant Physiol. 34:532–536.