Purchased by the U. S. Department of Agriculture
For Official Use

H. D. Fisher

J. A. Bondurant
Member ASAE

an Inexpensive COUNTERTIMER for Water Velocity Meters

Ag engineers seek more knowledge of how integrated circuit and solid-state technology can make possible simple countertimers to use with current metering devices . . .

MANY cup and propeller current meters usually are read out by an operator with headphones who counts the contact closures produced by the meter. Noise on the meter line may obscure the signal. At high count rates the operator may err. Some automatic counters require that the contacts in the current meter head carry large loads. This can cause the contacts to burn and stick, making the entire meter inoperative.

This countertimer can be built by anyone familiar with good soldering techniques. It provides a digital readout of contact closures at up to 25 counts per sec — limited only by the type of impulse counter used. The counter circuit provides high noise immunity (typically 2 v peak) and practically eliminates contact or point burning by reducing the load across the points to 3.1 v d-c at 1.6 ma. The counter-circuitry may be used separately to count closures of any normally open contacts or may incorporate a timing circuit to standardize the counting interval. This counter, built for about $45 for the counter circuit and $30 for the timer components, has proved reliable and is not affected by severe field conditions of moisture, dust, or shock.

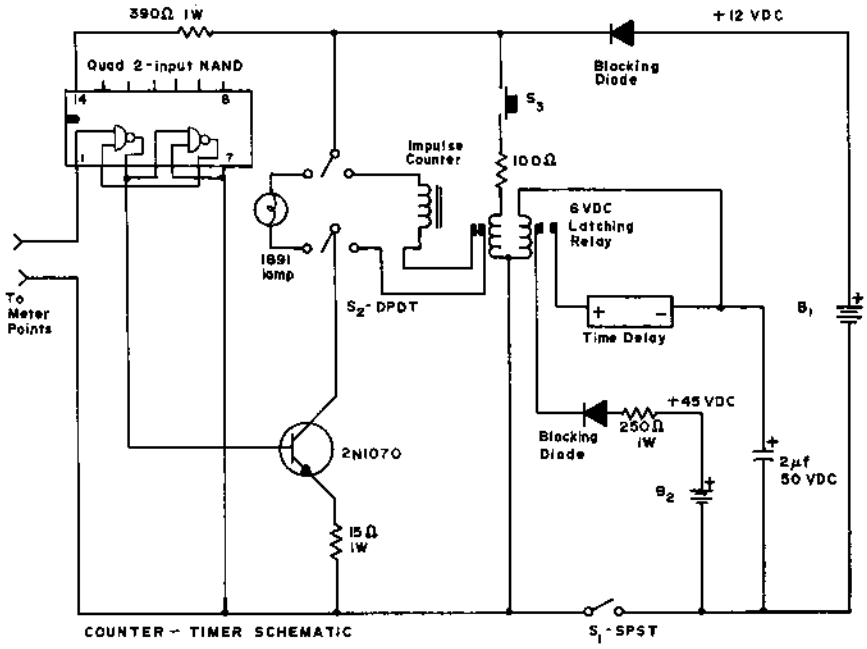

COUNTER – TIMER SCHEMATIC

Fig. 1 The schematic for the countertimer unit

The load across the points is kept small by using a pair of cross-coupled Transistor-Transistor Logic (TTL) current-sinking, 2 input positive NAND gates to produce a pulse for each contact closure (Fig. 1). This pulse is amplified by a switching transistor to drive an impulse counter. A 12 v lamp may be switched into the collector of the transistor to provide a visual checkout of circuit function. Unit (Fig. 2) is easily encased for ease of handling and transportation (Fig. 3).

The time base for the timing circuit is a compact (¾ in. OD by 2 in. long nominal) solid-state time delay device. The time delays are fixed, but can be specified

H. D. Fisher is a mathematician and J. A. Bondurant is an agricultural engineer with the Snake River Conservation Research Center at Kimberly, Idaho 83341. This is a contribution from the Northwest Branch, SWCRD, USDA, with the Idaho Agricultural Experiment Station cooperating. Trade names and company names do not infer any endorsement or preferential treatment of the product listed by USDA.

Articles on agricultural applications of instruments and controls are welcome — they may be submitted directly to ASAE's Committee on Instrumentation and Controls in care of its chairman, E. C. Meyer, Minneapolis-Honeywell Regulator Co., 2753 4th Ave. South, Minneapolis, Minn. 55405.

This article is reprinted from AGRICULTURAL ENGINEERING (vol. 51, no. 10, pp. 600-601, October 1970), the Journal of the American Society of Agricultural Engineers, St. Joseph, Michigan

from 0.025 to 300 sec. Reproducibility of the timing interval was found to be better than the manufacturer's ±3 percent specification. The timing circuit is manually activated through the momentary contact switch S_s; the time delay device disables the counter after the specified interval.

If the existing mechanical timer and impulse counter are retained, an Ott Z41 automatic counter, for example, can be rebuilt using this counter circuit for about $10. This reduces the contactor point load and eliminates point burning.

Price and Hoff current meters can be modified to provide more positive contact because the speed of these counting circuits essentially is limited only by the electromechanical readout. For this reason excessive contact bounce in the meter may produce multiple counts. These meter contacts may be replaced by an encapsulated reed switch activated by a small magnet fastened to and balanced with the propeller shaft. This provides a nonwearing, hermetically sealed pair of contacts to activate a counter. • •

Fig. 2 The countertimer circuit board

Fig. 3 The countertimer unit in its convenient metal carrying case with necessary controls visible

PARTS LIST

Counter Circuit:

- 1 SODECO Model TCeBZ4E impulse counter, 6 v d-c coil, 10 to 25 Hz
- 1 Texas Instruments SN7400N Quad 2 input NAND gate
- 1 SPST toggle switch
- 1 DPDT toggle switch
- 1 Indicator lamp holder
- 1 No. 1891 lamp
- 1 NEDA 926 lantern battery, 12 v d-c
- 1 14 pin DIL socket
- 1 2N1070 (replacement: 2N1702) transistor
- 1 100 PIV, 1 amp diode
- 1 each 390Ω 1w, 15Ω 1w resistors
- 1 10 in. x 6 x 3½ minibox

Timing Circuit:

- 1 Potter Brumfield type SL11D 6 v d-c magnetic latching relay
- 1 Artisan Electronics Model 437 solid-state timing device
- 1 SPST normally open pushbutton switch
- 1 NEDA 201 battery, 45 v d-c
- 1 100 PIV, 1 amp diode
- 1 2μf 50 v d-c capacitor
- 1 each 100Ω ½w, 250Ω 1w resistors