Simplified flow corrections for Parshall flumes under submerged conditions

A. R. ROBINSON, F. ASCE, Research Agricultural Engineer and Director
USDA, Snake River Conservation Research Center, Kimberly (Twin Falls), Idaho

Parshall flumes are widely used for measuring flow in canals, domestic water supply and sewage systems, and to a limited extent in natural streams. Normally, the device operates like a weir, the flow being contracted and passing through a critical depth. This condition is termed free flow and only one depth measurement, h_a, in the converging section is required to determine the flow. The discharge is given by the general relationship,

$$Q = K\, h_a^n \quad \ldots\ldots\ldots\ldots\ldots (1)$$

in which K and n are constant for a given size but vary for different sizes. Standard design data and calibration tables are available for flume sizes ranging in throat width from 1 in. to 50 ft, and in discharge from 0.01 to 3,300 cfs.[1,2,3] One particular advantage of using flumes rather than weirs is that the head loss is less, that is, there is a smaller change in the depth of the flow as it passes through the structure.

In many cases Parshall flumes do not operate under the free-flow condition. Three flow conditions through the flume are shown in Fig. 1. Conditions 1 and 2 are free flow. Between flow Conditions 2 and 3 the downstream water depth reaches a point such that the flow no longer passes through critical depth. Further increases in downstream depth cause the upstream depth to increase without a change in discharge. As shown in Fig. 1, two depth readings, h_a and h_b, are necessary and a correction must be applied to obtain the correct discharge under submerged flow. The quantity of flow for Condition 3 is less than for Condition 2. The degree of submergence is defined as the ratio of the depth at h_b to the depth at h_a. These points are at prescribed locations depending on the size of the flume. Relationships have been developed for determining the correct flow under submerged conditions.[1,2,3]

Submerged flow conditions, frequently found on many Parshall flume installations, are seldom recognized and corrections are rarely made. Failure to make corrections is surprising since a considerably greater discharge may be indicated than is actually flowing.

Available data on submerged flow through Parshall measuring flumes, and additional data obtained from both field and laboratory observations, were analyzed by the writer. From these data a simplified procedure was developed that gives an accuracy within the limits of previous methods.

The results of this analysis and the correction relationships for different sizes of Parshall flumes are summarized in Fig. 2. Here the discharge ratio, Q/Q_o, is given as a function of the percentage submergence, h_b/h_a, for different flume sizes. The actual or true discharge is Q, whereas Q_o is the free-flow discharge for a depth h_a that has been effected by submergence.

When submergence occurs, the depth at the upstream point, h_a, increases for a given discharge. The indicated discharge, Q_o, with submergence is greater than the actual discharge. The ratio Q/Q_o is actually a correction factor, which can be applied to the indicated discharge in order to obtain the correct discharge.

The use of Fig. 2 and the procedure for making corrections can best be illustrated by the following examples:

Example 1. *Given:* 6-in. flume, $h_a = 0.80$ ft, $h_b = 0.74$ ft.

$$\text{Submergence} = \frac{0.74}{0.80} = 92.5\%$$

From Ref. 1 for $h_a = 0.80$, $Q_o = 1.45$ cfs.

From Fig. 2, for a submergence of 92.5 percent, $Q/Q_o = 0.57$.

Then $Q = 1.45 \times 0.57 = 0.83$ cfs.

Example 2. *Given:* a 30-ft flume; $h_a = 2.10$ ft; $h_b = 1.72$.

Submergence = 82 percent.
From Ref. 2, $Q_o = 371$ cfs.
From Fig. 2, $Q/Q_o = 0.94$.
Then $Q = 371 \times 0.94 = 348$ cfs.

The difference between the observed and the actual flows in the foregoing examples are noteworthy. In Example 1, without the correction, an error of 43 percent would have been made in determining the amount of flow. In Example 2, an error of only 6 percent would have been made.

Errors occur even when there is only a small degree of submergence, and are more pronounced on the smaller flumes, as shown in the curves of Fig. 2. These curves represent the best single relationship for each flume under a range of discharges. A slight variation in the effect of submergence with magnitude of discharge was found. The ratio Q/Q_o increased slightly with discharge at a given degree of submergence. However, these curves represent the observed data with a maximum deviation of ± 7 percent.

This method of determining the discharge of Parshall measuring flumes under conditions of submergence is simple, accurate, and in many cases better than older methods. It should be emphasized that, in general, the measurements under submerged conditions are subject to a wider variation in accuracy because of problems in measuring the exact percentage of submergence.

References

[1] *Parshall, R.L., Measuring Water in Irrigation Channels with Parshall Flumes and Small Weirs,* U.S. Soil Conservation Service, Circular No. 843, May 1950.

[2] Parshall, R.L., *Parshall Flumes of Large Sizes,* Colorado Agricultural Experiment Station, Bulletin No. 4264, March 1953.

[3] Robinson, A.R., *Parshall Flumes of Small Sizes,* Colorado Agricultural Experiment Station, Technical Bulletin No. 61, October 1957.

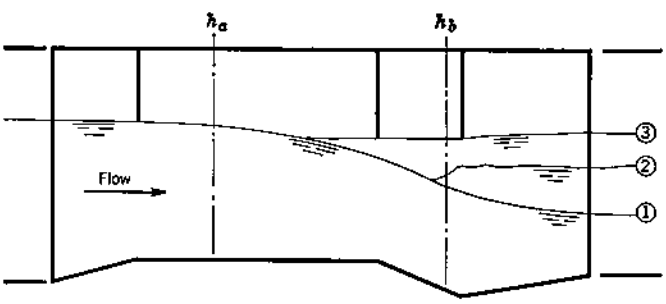

◄ **FIG. 1. Three flow conditions through a Parshall flume.**

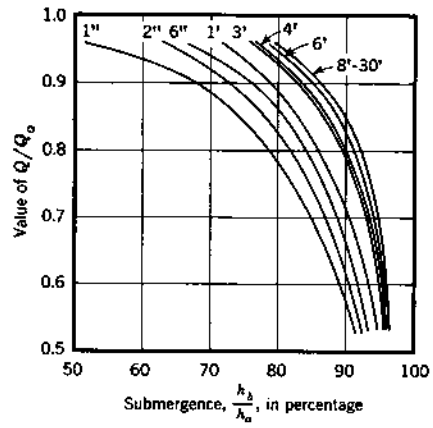

► **FIG. 2. Effect of submergence on Parshall flumes.**