443

This article is reprinted from the TRANSACTIONS of the ASAE (Vol. 23, No. 1, pp. 109, 110, 111, 1980)
Published by the American Society of Agricultural Engineers, St. Joseph, Michigan

An Instrumented Lysimeter System for Monitoring Salt and Water Movement

C. W. Robbins, L. S. Willardson
MEMBER
ASAE

ABSTRACT

A lysimeter system is described which consists of four continuously weighing lysimeters mounted on a portable platform. The lysimeters, made from low pressure PVC irrigation pipe (1.18 m deep by 0.31 m dia), are placed on a hydraulic weighing system that consists of either a water-filled rubber pillow or an automotive innertube connected to a water column. The sensitivity of the weighing system is 0.1 kg or an equivalent water depth of 1.4 mm. One bar ceramic cups, placed in the center of the lysimeters at 0.25, 0.50 and 0.75 m from the soil surface, are connected to the outside for soil solution sampling. Eight small bolts symmetrically located around the lysimeter at the same depths as the ceramic cups, serve as "four probe" contacts for electrical conductivity measurements. The cost of each set of four lysimeters in 1978 was about $400.

INTRODUCTION

Lysimeters of various kinds have been used since the late 18th century (Joffe, 1932) for studying the movement of water, soluble salts, heavy metals, municipal, agricultural and industrial wastes and pesticides through soils. The term "lysimeter" has been used to include a wide variety of instruments, ranging in utility and complexity from manually weighed greenhouse pots to remote continuous weighing and recording systems (Hanks and Shawcroft, 1965; Ledrew and Emerick, 1974; Wagner, 1962) and rhizotrons constructed next to subsurface buildings with an exposed transparent wall for root growth observation (Soileau et al., 1974).

The design of a particular lysimeter depends on the data to be obtained and the resources available to build the equipment. The low cost portable lysimeters described here were designed for soil profile salinity studies. The crops grown served only as a soil moisture sink, to concentrate the soil solution. No attempt was made to compare evapotranspiration or yield to field conditions. The lysimeters were instrumented for soil solution sample collection and electrical conductivity measurement by several methods at three depths, under conditions where the evapotranspiration, total soil profile moisture content, and subsurface drainage could be closely monitored and where the soils could be irrigated to a predetermined leaching fraction. The portable construction allowed moving the lysimeters outside during warm weather and moving them into greenhouses and later under artificial lighting during cold weather.

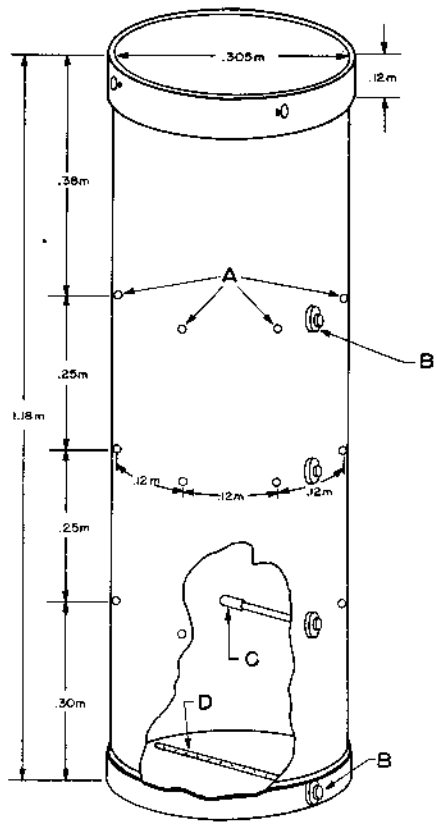

FIG. 1 Lysimeter tanks constructed from 0.31 m PVC pipe showing four probe contacts (10-32 galvanized steel bolts) (A), sampling ports for the ceramic cups and the bottom drain (B), 1.0 bar ceramic cup (C), and the perforated drain tube (D).

LYSIMETER CONSTRUCTION

Thirty-six, 1.18 m (46.5 in.) deep lysimeters were constructed from 0.31 m (12 in.) inside diameter white PVC low-pressure irrigation pipe for use in a salinity-water-management study (Robbins, 1979). A commercial PVC end cap was cemented to one end to form the bottom, and a PVC pipe band was cemented to the top to reinforce the area supported by four evenly spaced stabilizer eye bolts (Fig. 1). Three rows of eight galvanized steel bolts were placed through evenly spaced holes around the tanks 0.25, 0.50 and 0.75 m (9.8, 19.7 and 29.5 in.)

Article was submitted for publication in March 1979; reviewed and approved for publication by the Soil and Water Division of ASAE in May 1979.

Contribution from the Department of Agriculture and Irrigation Engineering, Utah State University, Logan, UT 84322 and USDA Science and Education Administration, Agricultural Research, Snake River Conservation Research Center, Kimberly, ID 84331.

This research was supported by the office of Water Resources Research, USDI, Project No. JEA-113-1.

The authors are: C. W. ROBBINS, Soil Scientist, Snake River Conservation Research Center, USDA-SEA-AR, Kimberly, ID; and L. S. WILLARDSON, Profesor, Agricultural and Irrigation Engineering, Utah State University, Logan.

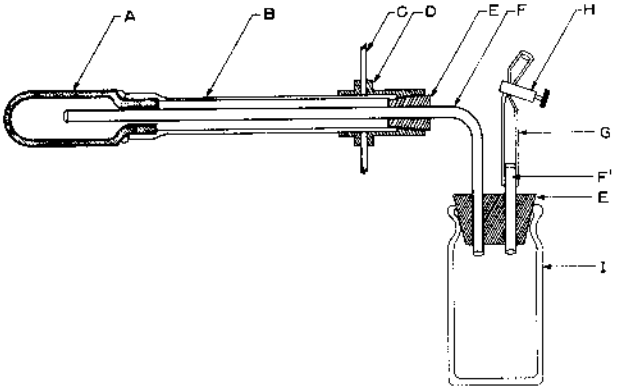

FIG. 2 The soil-water-sample collecting system consists of a 1.0 bar ceramic cup (A) mounted on a 13 x 130 mm (0.5 x 5.25 in.) piece of CPVC tubing (b) held in place on the lysimeter wall (C) by a 22 to 13 mm 7/8 to 1/2 in.) CPVC reducer (D) on the outside and a reducer of the same size cut in half on the inside. Rubber stoppers (E) hold the 6.0 mm (0.25 in.) outside diameter plexiglass tubing F and F' in place. The plastic tubing (G) is clamped off by a screw clamp (H) after evacuating the sample bottle (I) with a hand vacuum pump.

below the final soil surface as contacts for the "four probe" method of soil salinity determination (Rhoades et al., 1976). The bolt heads were placed on the inside with a nut on the outside to hold the bolts tightly in place. Ceramic cups (1.0 Bar) were placed at the same soil depths for removing soil solution samples.

The soil-solution sampling system (Fig. 2) consists of a plexiglass tube connecting the ceramic cup to a 150 mL sample bottle. The sample system is evacuated through a second tube by a hand vacuum pump at sampling time.

Four of the lysimeters had salinity sensors installed next to the base of the ceramic cups with the wire leads going out through the sides of the lysimeters. These are not shown.

A CPVC drain tube with 1.6 mm (1/16 in.) holes drilled in the side and bottom and an external outlet was mounted in the bottom of each tank. The drain tube was wrapped with three layers of nylon window screen to keep coarse sand from plugging the holes and was buried in 40 mm (1.6 in.) of sand finer than 6 mm (0.25 in.) and coarser than 1 mm (0.04 in.).

Square support frames, divided into four equal cells, were fastened to square shipping pallets (Fig. 3). A plywood floor was placed in the bottom of each cell (A, Fig. 3) and a rubber innertube was filled with water and placed in each cell (B, Fig. 3). Automotive tire innertubes (0.14 x 0.20 m or 5.50 x 8 in.) were used as pillows in the first set of lysimeters constructed (Robbins, 1979) and square pillows constructed from nylon reinforced butyl rubber (0.38 x 0.36 m overall) were used for a second set of lysimeters. The square pillows were made from a 0.72 x 0.38 m piece of butyl, folded in half. The three open edges were vulcanized closed and a tire valve stem was vulcanized 0.1 m from the seamless edge.

A flexible vinyl manometer tube (6.3 or 9.7 mm ID) was attached to each pillow (E, Fig. 3) and the pillows were filled with water and placed in each cell (B, Fig. 3). Care was taken to exclude air from the system. It was also necessary to add 1 mL of saturated $HgCl_2$ solution to each manometer tube to prevent algae growth and to insert a fiberglass plug into each tube to keep insects out. The innertube or pillows were then covered with a piece of plywood (C, Fig. 3). Ten mm clearance was provided around the cover for free movement of the weighing

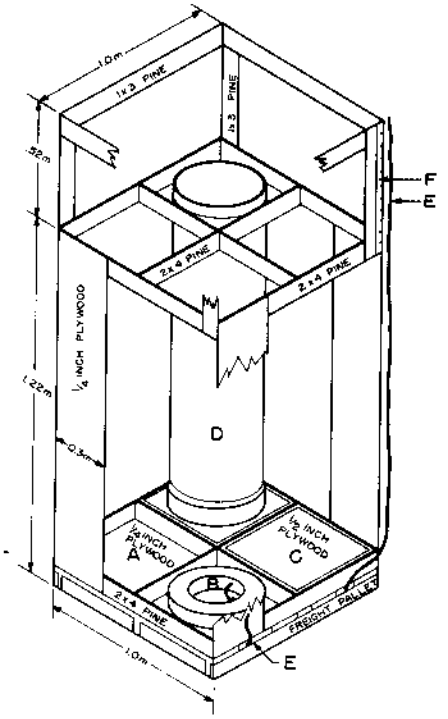

FIG. 3 The weighing mechanism in the lysimeter module consists of a box (A) with an 0.14 x 0.28 m innertube or butyl pillow (not shown) (B) covered with a piece of plywood (C). The lysimeter tank (D) rests on the plywood. The manometer tube (E) is connected to the inner tube or butyl pillow valve stem and is supported by a millimeter scale (F).

system. Each lysimeter sits on a cell cover (D, Fig. 3) and is supported at the top by a second frame with the same dimensions as the lower frame. This support frame is held at each corner by a plywood brace. A third square frame was constructed above the second to support the manometer tubes and one meter wooden rulers used as manometer scales.

The lysimeters were maintained vertically in a free floating position by a system of four threaded stabilizer rods loosely fastened with eye bolts to the frame and to the lysimeter tanks (Fig. 4). Each eye bolt is held in place by two nuts tightened against each other on the threaded rods, a flat washer, the eye bolt, a flat washer and two nuts tightened against each other (insert Fig. 4). About 6 mm (0.25 in.) extra space is left between the flat washers and the eye bolt to allow the lysimeter tanks to move freely up or down as the weight changes.

This sampling and measuring system provided the water samples and other data necessary to compare salinity data obtained from the "four-probe" method, direct soil extract, and salinity sensors. Chemical data from the soil solution extracts were also used in the validation of a salt transport and storage model (Robbins, 1979).

CALIBRATION AND OPERATION

The calibration factor to convert from kg of water applied to mm of hydraulic head was approximately 0.1 kg/mm, when 7.0 L of water were added to the innertubes. The same calibration factor was obtained when 6.0 L of water were added to the square butyl pillows. In

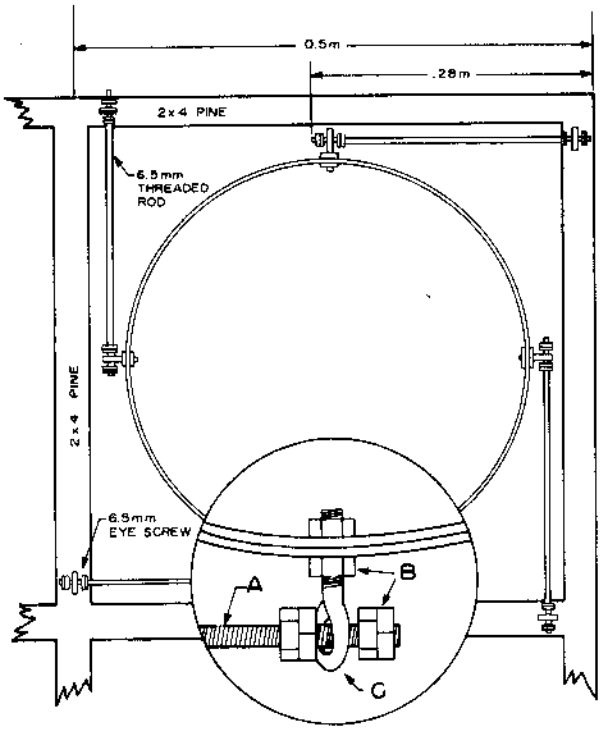

FIG. 4 The top of the lysimeters are stabilized by four threaded rods (A) which are held loosely in place by pairs of nuts tightened against themselves (B) through eye bolts (C). Washers on both sides of the eye bolt are not shown.

both cases the weighing systems were calibrated with accurately weighed 10 kg lead bricks as the soil was being added to insure that the same weight of a given soil was added. The average initial calibration factor was 0.0968 kg/mm for the lysimeters using innertubes. Six months later these were recalibrated and the average calibration factor had changed to 0.0982 kg/mm which would suggest that the innertubes had stretched. All of these lysimeters have shown this trend. During one six month period the lysimeters were moved twice, which would tend to maximize the stretching of the innertubes, thus these hydraulic weighing systems should be periodically recalibrated. A small amount of water can be added or removed from each innertube to change the calibration factor which depends on the relative pressure in the innertube and consequently on the height of the water column in the manometer. A higher pressure in the innertube decreases the effective surface area in contact with the cover board.

To avoid the problem of the innertube stretching with time, nylon reinforced butyl pillows were used. The second set of lysimeters have not been in use long enough to properly evaluate their service, however, Hanks and Shawcroft (1965) suggest that the reinforced butyl pillow size remains constant with time. By placing a 0.316 x 0.316 m wooden block on the pillow to give a constant surface area (0.1 m^2) the calibration factor is approximately 0.1 kg/mm, depending on the amount of water in the pillow. A 1 mm change in the manometer height is equivalent to a 0.1 kg change or to 1.4 mm evapotranspiration or irrigation. In order to account for temperature fluctuation error and pillow drift a dummy lysimeter was constructed with the second set of lysimeters. The dummy lysimeter was filled with dry sand and then covered to prevent addition or loss of moisture.

Material for each reinforced pillow costs about $3 compared to $2.50 for the innertubes. Description for both weighing systems is given for those areas where the nylon reinforced butyl and the necessary vulcanizing equipment may not be available. A dummy lysimeter is suggested for either weighing system in order to correct the manometer readings for temperature and aging drift.

For the first study, eighteen lysimeters were filled with a loam (46 percent sand, 35 percent silt, and 19 percent clay) soil to a bulk density of 1.42 g/cm^3, and eighteen were filled with a silty clay loam (18 percent sand, 48 percent silt, and 34 percent clay) soil to a bulk density of 1.20 g/cm^3. Both soils were air dried, screened through a 6.3 mm (0.25 in.) screen and added to the lysimeters. They were gently pounded around the outside with a rubber hammer as the soil was added to maximize soil bulk density. After 8 mo of lysimeter use, the loam had shown no sign of settling, whereas the silty clay loam soil settled an average of 2 cm or 2 percent of the soil column depth. Although the settling soil caused downward pressure on the top and sometimes the second CPVC extraction tubes, which resulted in visual signs of mechanical stress on the lysimeter walls, none of the extraction tubes were broken off or leaked.

Soil solution samples (50-100 mL) were obtained by applying vacuum (about 550 mm Hg) to the sample bottles (Fig. 2), 24 h after irrigation. Of the 108 sample cups, usually less than four or five failed to produce water samples for any given sampling and every sample cup produced samples sometime during the study period. This would indicate that they were all working. Air leaking around the large sample bottle rubber stoppers (Fig. 2) as they aged, seemed to be the most common problem. Many had to be replaced after 6 mo use due to rough spots developing where they contacted the sample bottles. Some of the bolts used for the four probe contacts started to rust slightly after 8 mo use, but this did not seem to affect the results obtained up to that time. Stainless steel bolts should be used for these contacts.

Moving the lysimeters with a fork lift did not cause any particular problem. The lysimeters were used outside during the summer and then moved into a greenhouse during the fall and winter.

The materials used to build the thirty six lysimeters cost about $3500 in 1978. This does not include the soil salinity sensors which cost about $42 each.

References

1 Hanks, R. J., and R. W. Shawcroft. 1965. An economical lysimeter for evaporation studies. Agron. J. 57:634-636.

2 Joffe, J. S. 1932. Lysimeter studies: I. Moisture percolation through the soil profile. Soil Sci. 34:123-143.

3 Ledrew, E. F., and J. C. Emerick. 1974. A mechanical balance-type lysimeter for use in remote environments. Agr. Meteorol. 13:253-258.

4 Rhoades, J. D., P. A. Raats, and R. J. Prather. 1976. Effects of liquid-phase electrical conductivity, water content, and surface conductivity on bulk soil electrical conductivity. Soil Sci. Soc. Amer. J. 40:651-655.

5 Robbins, C. W. 1979. A salt transport and storage model for calcareous soils that may contain gypsum. Ph.D. Dissertation. Utah State University, Logan, Utah. 79 pp.

6 Soileau, J. M., D. A. Mays, F. E. Khasawneh, and V. J. Kilmer. 1974. The rhizotron-lysimeter research facility of TVA. Muscle Shoals, Alabama. Agron. J. 66:828-832.

7 Wagner, G. H. 1962. Use of porous ceramic cups to sample water within the profile. Soil Sci. 94:379-386.