Spring-Operated Semiautomatic Irrigation Valves

A. S. Humpherys, E. Oest, D. A. Young

MEMBER ASAE — ASSOC. MEMBER ASAE

This article is reprinted from the TRANSACTIONS of the ASAE (Vol. 26, No. 1, pp. 134–136 & 140, 1983)
Published by the American Society of Agricultural Engineers, St. Joseph, Michigan

ABSTRACT

TORSION spring operators for standard low pressure butterfly type irrigation valves are described. These are used with 24-h timers to semiautomate gated pipe irrigation systems and are particularly well suited for use with flow-thru single pipeline systems. They are presently marketed in 150 mm (6 in.), 200 mm (8 in.) and 250 mm (10 in.) diameter sizes.

INTRODUCTION

Increasing energy and labor costs are forcing many irrigators to improve their irrigation systems to achieve greater efficiency. New equipment and concepts introduced in recent years include pneumatically operated valves (Fischbach and Goodding, 1971; and Haise et al., 1980), water operated valves (Humpherys and Stacey, 1975), automated level basin irrigation (Dedrick and Erie, 1978; and Erie and Dedrick, 1978), and cablegation (Kemper et al., 1981). These provide alternatives from which the irrigator can choose, for no one system is suited for all conditions.

Another recent innovation is the "flow-thru" gated pipe system, which is being used in the Grand Valley of CO. Gated pipe is installed on a stair-step grade with a valve immediately below each drop as shown schematically in Fig. 1. The valve either opens or closes to allow irrigation to proceed to the next set in the sequence. The irrigation sequence proceeds in the downstream direction when the valve is of the normally open type which releases water downstream at the end of its timed period. Irrigation proceeds in the upstream direction if the valve is a normally closed type that "checks" the water in the pipeline when it closes at the end of its timed period. Irrigation in the downstream direction with a normally open valve is the preferred mode unless a valve which closes very slowly is used. Some of the first systems used a normally closed check valve which created undesirable pressure surges in the pipeline when it closed suddenly. The spring-operated valves described in this paper were developed for use in the flow-thru gated pipe system and release water downstream without causing pressure surges. They can also be used in other systems or at locations where a semiautomatic valve opening is required without an accompanying valve closure.

Article was submitted for publication in March 1982; reviewed and approved for publication by the Soil and Water Division of ASAE in July 1982.

Contribution from the Snake River Conservation Research Center, USDA-ARS, Kimberly, ID.

The authors are: A. S. HUMPHERYS, Agricultural Engineer, USDA-ARS, Snake River Conservation Research Center, Kimberly, ID; E. OEST, President, Irrigation Systems Co., Fruita, CO; and D. A. YOUNG, Research Associate, Colorado State University, Grand Junction, CO.

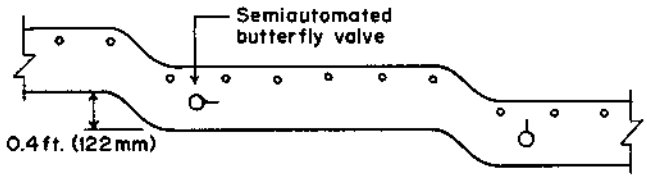

FIG. 1 Schematic diagram of semiautomatic "flow-thru" gated pipe irrigation system.

VALVE DESIGN AND CONSTRUCTION

Simple butterfly valves are commonly used in closed gravity irrigation systems. These are normally operated by hand, but can be automatically or semiautomatically controlled if fitted with a suitable operator. The first spring-operated valves used a tension spring as shown in Fig. 2. They were designed so that the maximum force developed by the spring was applied to open the valve. After setting for a time in the closed position, the valve's rubber disc or butterfly takes a set within the pipe and considerable torque is sometimes required to break it loose. The breakaway torque required to open a valve when this occurs is usually greater than that required to close the valve.

The valve shown in Fig. 2 was operated by a standard off-the-shelf spring 25 mm (1 in.) in diameter with an unsprung length of 400 mm (16 in.) and a spring constant of approximately 100 N/m (0.6 lb/in.). The spring and timer mounts were fastened to clamp bands so that their position on the pipe could be easily adjusted. This type mounting is shown in Fig. 2 with a timer-controlled solenoid trip.

Originally, it was envisioned that many of the valves would likely be installed in the end of a full length of pipe. However, it became evident that a valve in a separate short section of pipe would be more convenient to handle. Since the tension spring required a relatively long pipe length for the valve package, consideration was given to using a torsion spring operator which requires a

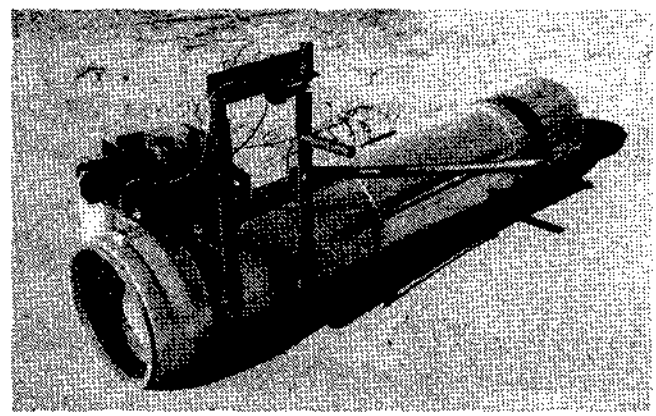

FIG. 2 Semiautomatic butterfly irrigation valve with a tension spring operator and solenoid release mechanism.

much shorter length of pipe. Several different torsion springs from existing farm equipment applications were tested, but none of them were satisfactory. The springs did not have a deflection range of 90 deg, which is needed to operate a butterfly valve from the closed to open position. From previous experience with other valve operators, it was determined that torsion springs in the 23 N/m (200 lb/in.) to 34 N/m (300 lb/in.) torque range would be satisfactory for valves in the 150 mm (6 in.) to 250 mm (10 in.) diameter range.

A prototype torsion spring for testing was designed for this application by the Hollister Wire Products Co., Artesia, CA* (HWP part #52136-0.218L). The spring was designed to develop 28 N/m (250 lb/in.) torque with an angular travel of 90 deg. It was made from 5.5 mm (0.218 in.) diameter stainless steel torsion rod with an inside coil diameter of 29 mm (1.125 in.).

Low pressure irrigation butterfly valves are made by a number of irrigation equipment suppliers and most of them can be fitted with the torsion spring operator. Standard valves made with heavy gauge aluminum tubing having a wall thickness of 2.5 mm (0.100 in.) were used for the initial tests. The heavy gauge tubing was chosen because of welding ease. A number of valves were constructed for field testing using the torsion spring and trip linkage, as shown in Fig. 3. The butterfly shaft was extended by welding a spring arbor made from 13 mm (1/2 in.) nominal diameter steel pipe on its end. The butterfly valve was supplied by the manufacturer in the desired pipe length having end fittings so that the valves could be installed in any gated irrigation pipeline. The valve shown in Fig. 3 is 900 mm (36 in.) long with a gate opening on each side so that it can serve in both right and left hand positions. Although it could be made shorter, the length was chosen to accommodate the 760 mm (30 in.) gate spacing commonly used.

When the valves were tested, it was observed that some of them did not quite return to their exact open position when tripped. Normally, this is not significant because any additional head loss is very small. However, to be certain that the valve returns exactly to its full open position, a small amount of spring preload can be applied to the valve along with a stop to prevent overtravel. In most cases, the valve disc does not come to the full perpendicular position in the pipe in its closed position. Thus, its angular travel varies from about 85 to 90 deg between the open and closed positions. The torsion spring made from 5.5 mm (0.218 in.) diameter rod approaches its yield point at about 90 deg of angular travel. Therefore, the angular travel cannot exceed this amount without overstressing the spring, in which case it takes a set and will not function as designed. Operating at its stress limit may also result in a decrease in torque over a period of time. Thus, this spring cannot be used to develop preload.

Another spring was designed which could provide preload. In order to increase the angular travel beyond 90 deg and to provide a margin of safety for stress, it is necessary to use a lighter spring. Springs using relatively heavy or stiff material with large wire or rod diameters reach the yield point sooner and in a smaller angular travel distance than do lighter springs. Both right and left hand springs made from 4.9 mm (0.192 in.) diameter stainless steel torsion rod and designed for 23 N/m (200 lb/in.) of torque were obtained (Hollister Wire Products HPW part #52136-0.192R and HWP part #52136-0.192L). These springs can be deflected through an angular distance of 105 deg without deformation or strength loss. Thus, they can provide 5 to 10 deg of preload to hold the valve disc in its open position against a stop and still have a margin of safety for stress. They were made in both right and left hand configurations so that they can be used in pairs, one on each end of the valve disc shaft, when torque requirements exceed 23 N/m (200 lb/in.). Both springs may be needed for 250 mm (10 in.) valves. A third spring made from 5.3 mm (0.207 in.) torsion rod (HWP part #52136-0.207L) is used for 150 mm (6 in.) and 200 mm (8 in.) valve production models. They are used without a stop since later tests indicated a stop is not needed for most conditions.

One item of concern with the valve model shown in Fig. 3 is the potential safety hazard of the lever arm when the valve is tripped to its open position without water in the pipe. The arm moves suddenly and with considerable force which could cause injury if it should strike a person. When the valve opens during normal operation, the safety hazard is minimal because water in the pipe cushions the valve movement and there is usually no person nearby. However, during valve demonstrations or when resetting the trip linkage, it could be a safety hazard. The trip arrangement was modified as shown in Figs. 4 and 5, to eliminate the angular travel of the long lever arm. The modified trip uses a shorter arm for the angular travel which has a much smaller impact potential. The long arm is used for reset only.

A short model of the valve, built into the drop section of a flow-thru gated pipe system is shown in Fig. 6. This configuration costs less than fabricating both the drop and semiautomatic valve separately.

CONTROLS

The valves presently being built and tested use a 24-h mechanical timer† which has a built-in trip release mechanism. The valve trip linkage was designed for this particular timer. However, other timers may be used by modifying the trip linkage to make it compatible with the

*Company and trade names are shown for the benefit of the reader and do not imply endorsement or preferential treatment of the company or products noted.

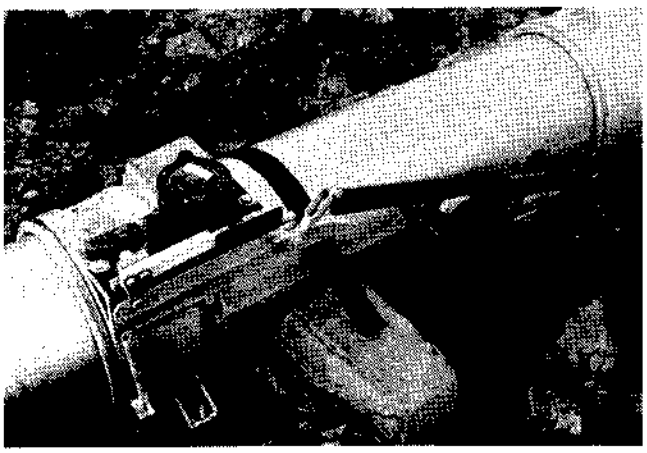

FIG. 3 Semiautomatic irrigation valve with a torsion spring operator and mechanical release timer unit being used in the Grand Valley of CO.

†Coret and Co. Ltd., Tokyo, Japan; available in the U.S. through Irrigation Systems Co., Fruita, CO.

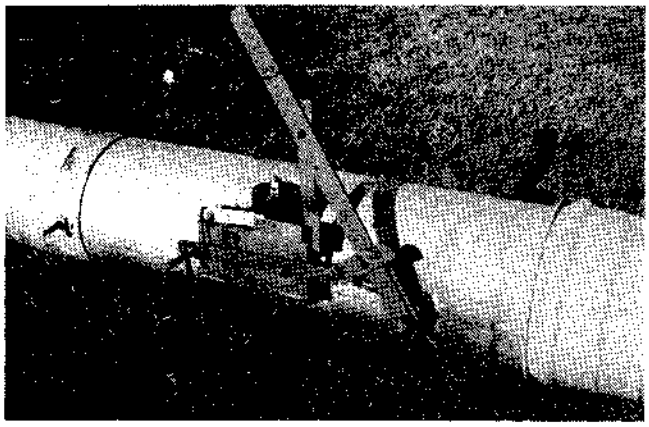

FIG. 4 Semiautomatic irrigation valve with a modified trip linage for safe operation.

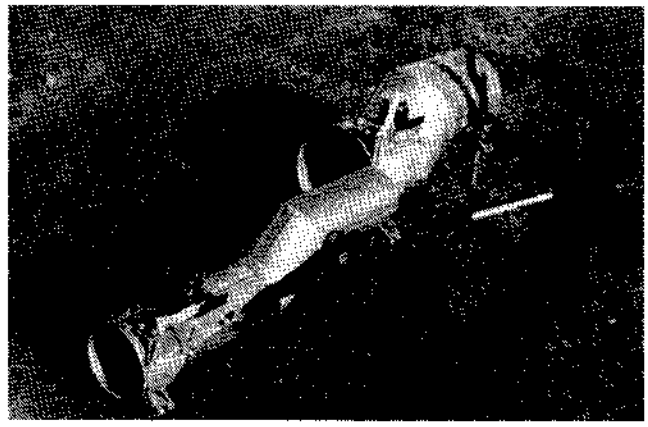

FIG. 6 Photo of torsion spring-operated valves built onto the "drop" section of a flow-through gated pipe system.

specific timer to be used. Electromechanical and electronic timers can also be used with battery-powered solenoids to operate the trip linkage. A solenoid-operated trip is used in the valve model shown in Fig. 2. The solenoid is a 6VDC unit energized momentarily by capacitor discharge. A 12V lantern battery was used to charge the 22,000 μfd capacitor.

FIELD TESTS

Valves incorporating the latest modifications were not available for field testing until near the end of the 1981 irrigation season. However, several valves of the earlier designs were in use during the 1981 irrigation season in the Grand Valley of CO. During the limited field tests conducted to date,, the valve shown in Fig. 3 performed well and the objective of developing a functional valve for the flow-thru gated pipe system which does not cause pressure surges was achieved. The valve has been approved by the Soil Conservation Service, USDA for use in semiautomated irrigation systems in CO. It is being marketed by Irrigation Systems Co., Fruita, CO in 150 mm (6 in.), 200 mm (8 in.), and 250 mm (10 in.) diameter sizes.

A valve made to operate in the reverse mode by closing when tripped was briefly tested. However, it operated similar to a check valve and closed too suddenly for most conditions. It could be used in this manner at a turnout below a supply ditch, for example, where the upstream pipe length is very short. Otherwise, it could create undesirable pressure surges in the pipeline.

SUMMARY

A semiautomated valve was developed for flow-thru gated pipe systems which does not cause pressure surges in the pipeline. The valve is a standard low pressure irrigation butterfly valve operated with specially designed torsion springs. The normally open valve is controlled by a 24-h mechanical timer and opens automatically at the end of a predetermined time period. It can also be designed for use with electronic timers. The valve performed well in field tests in the Grand Valley of CO where it is presently marketed in 150 mm (6 in.), 200 mm (8 in.), and 250 mm (10 in.) diameter sizes.

(continued on page 140)

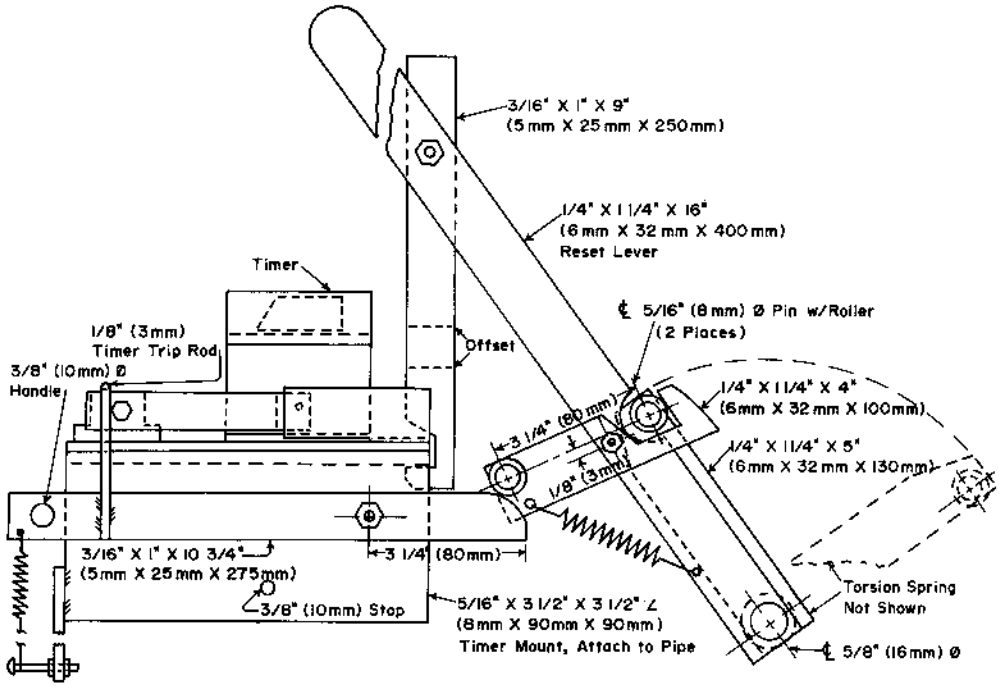

FIG. 5 Modified trip linkage for safe use of torsion spring-operated valve.

References

1 Dedrick, A. R., and L. J. Erie. Automation of on-farm irrigation turnouts utilizing jack-gates. TRANSACTIONS of the ASAE 21(1):92-96.

2 Erie, L. J., and A. R. Dedrick. 1978. Automation of an open-ditch irrigation conveyance system utilizing tile outlets. TRANSACTIONS of the ASAE 21(1):119-123.

3 Fischbach, P. E., and R. Goodding II. 1971. An automated surface irrigation valve. Agricultural Engineering 52(11):586-585.

4 Haise, H. R., E. G. Kruse, M. L. Payne, and H. R. Duke. 1980. Automation of surface irrigation: 15 years of USDA research and development at Fort Collins, CO, U.S. Dept. of Agr., Production Research Report No. 179, 60 pp.

5 Humpherys, A. S., and R. L. Stacey. 1975. Automatic valves for surface irrigation pipelines. Proc. Am. Soc. Civil Engrs., J of the Irrig. and Drain. Div. 110(IR2):95-109.

6 Kemper, W. D., W. H. Heinemann, D. C. Kincaid, and R. V. Worstell. 1981. Cablegation: I. Cable controlled plugs in perforated supply pipes for automating furrow irrigation. TRANSACTIONS of the ASAE 24(6):1526-1532.