Automated Air-Powered Irrigation Butterfly Valves

Allan S. Humpherys
MEMBER
ASAE

This article is reprinted from the TRANSACTIONS of the ASAE (Vol. 26, No. 4, pp. 1135–1139, 1983)
Published by the American Society of Agricultural Engineers, St. Joseph, Michigan

ABSTRACT

PNEUMATIC operators were used to automate low pressure irrigation butterfly valves. Criteria are presented for selecting components for this application. Pilot valves for the automated valve units are battery-powered and momentarily energized using the electrical discharge from capacitors. Both mechanical and electronic timers were used to control the irrigation valves. Other components in the valve package are described. Butterfly valves in both single and tee configurations were field tested.

INTRODUCTION

Buried pipelines and gated surface pipe are widely used to improve farm irrigation systems and to increase water application efficiencies. Further improvements can be made by automating all or part of the system. Irrigation on lands that are well suited for surface irrigation can usually be automated to achieve labor and water savings at lower cost and with less energy than is generally required for sprinkler methods of irrigation. To automate pipeline systems, irrigation must be automatically sequenced from one turnout or irrigation set to another. This can be accomplished with automated irrigation valves controlled by timers or electrical controllers. Most automated irrigation valves are either pneumatically operated (Fischbach and Gooding, 1971; Haise et al., 1980) or water-operated (Humpherys and Stacey, 1975).

The objective of the study reported in this paper was to develop a complete automated valve unit or "package" using off-the-shelf components to the extent possible because the commercial availability of equipment designed specifically to automate surface irrigation systems is very limited. Components for this use often must be modified or adapted from other uses. In some instances, automation was specified, but equipment adapted to the farm conditions encountered was not commercially available (Boesch et al., 1981).

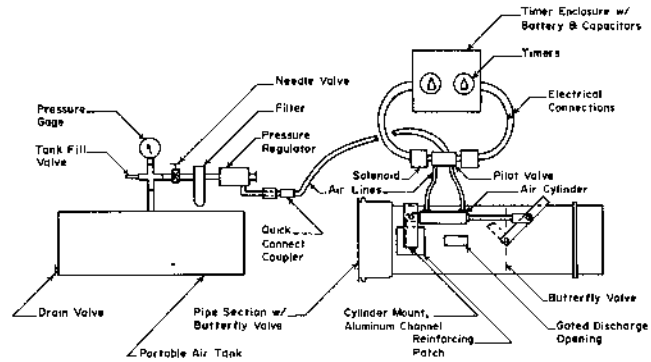

Fig. 1—Schematic drawing of an automated butterfly valve unit showing butterfly valve, air cylinder, timer and air tank assemblies.

REQUIREMENTS AND DESCRIPTION OF VALVE COMPONENTS

Butterfly valves are commonly used in gravity pipeline irrigation distribution systems. They are usually hand-operated but can be automatically controlled if fitted with suitable operators. Springs (Humpherys et al., 1983) or pneumatic operators such as air cylinders and rotary actuators may be used to operate the valves.

The components comprising an automated irrigation butterfly valve unit are shown schematically in Fig. 1 and consist of the following assemblies: (a) butterfly valve in a short pipe section, (b) penumatic operator, (c) pilot valve, (d) timer or controller and (e) portable air tank with its associated accessories and fittings. The pneumatic operator is mounted so as to provide a 90-deg rotation of the butterfly valve. Compressed air to actuate the operator is supplied from a portable air tank. A 4-way pilot valve is used to apply air pressure to one side of the operator while exhausting the opposite side to either open or close the butterfly valve. The pilot valve is controlled by a timer or irrigation controller. An automated butterfly valve package unit is shown in Fig. 2.

Butterfly valves

Low pressure butterfly valves are made by a number of irrigation equipment manufacturers and are usually rated for service up to about 170 kPa (25 psi). Portions of some systems may have pressures this high but most low pressure gravity systems operate at pressures of less than 70 kPa (10 psi).

To simplify fabrication and for ease in handling, the butterfly valves were obtained factory-installed in short pipe sections approximately 90 cm (3 ft) long. This length is needed to mount an air cylinder on the pipe. Since the pipe section containing the valve is longer than

Article was submitted for publication in September, 1982; reviewed and approved for publication by the Soil and Water Div. of ASAE in February, 1983.

Contribution from the Snake River Conservation Research Center, USDA-ARS, Kimberly, ID.

Company and trade names are shown for the benefit of the reader and do not imply endorsement or preferential treatment of the company or products noted.

The author is: ALLAN S. HUMPHERYS, Agricultural Engineer, Snake River Conservation Research Center, USDA-ARS, Kimberly, ID.

Acknowledgments: The author gratefully acknowledges the assistance provided by David Young, Research Associate, Colorado State University, Grand Junction, Colorado, and William McMullen, Agronomist, Soil Conservation Service, Roosevelt, Utah, in making field tests in the Grand Valley of Colorado and the Uinta Basin of Utah; and to H. D. Fisher, Electronics Engineer and Michael Wilson, Engineering Technician, Snake River Conservation Research Center, for assistance in assembling the timers used in the field tests.

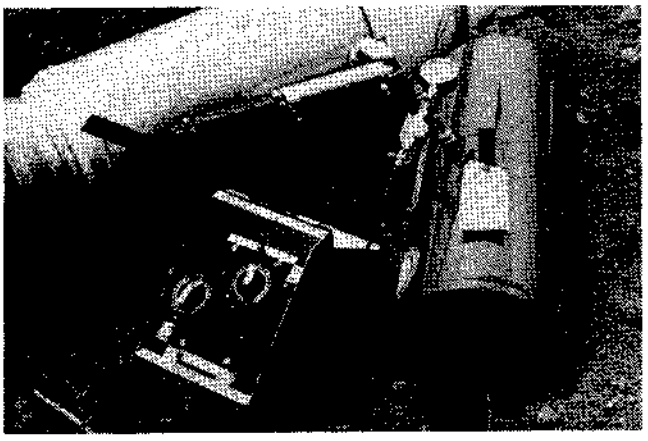

Fig. 2—Automated single irrigation butterfly valve unit.

the furrow spacing widths commonly used, a pipe gate or discharge opening was installed in the pipe downstream from the butterfly valve. A "foot" was also attached to prevent the pipe from rolling on its side. A reinforcing patch on which to mount the cylinder was welded to pipes having a wall thickness less than about 2.4 mm (0.094 in.).

During the course of valve development, the minimum operator torques shown in Table 1 were adequate to both open and close the butterfly valves that were used,* if the butterfly disc was not allowed to go "over center". Valves from other manufacturers may have different operating torque requirements. Opening the valve usually requires more torque than to close it.

Twin valves in a tee configuration were also used. These valves have the butterfly-disc shaft parallel to the upstream leg of the tee so that the edge of the disc is exposed to the flow rather than part of its flat face. This results in a more efficient flow pattern as water leaves the transition.

*Manufactured by Hastings Pipe Co., Hastings, Nebraska and Midwest Irrigation Co., Henderson, NE.

TABLE 1. MINIMUM REQUIRED TORQUE FOR OPERATING LOW PRESSURE IRRIGATION BUTTERFLY VALVES.

Valve diameter	Minimum required operator torque
150 mm (6 in.)	23 Nm (200 lb-in.)
200 mm (8 in.)	27 Nm (240 lb-in.)
250 mm (10 in.)	30 Nm (270 lb-in.)
300 mm (12 in.)	34 Nm (300 lb-in.)

Pneumatic operators

Two types of pneumatic operators are commercially available. The first is a standard piston type air cylinder while the second is a rotary actuator,† shown in Fig. 3.

Air cylinders

Air cylinders are widely used in industrial applications and are made by a number of different manufacturers. Heavy duty or industrial grade cylinders are not required for this use. However, the cylinders must have good rod seals and preferably extra packing or rod wiper seals that are air tight. Double acting cylinders are used to both open and close the irrigation valves. The cylinders are pivot mounted on the rear and have a special long-throated clevis attached to the rod end of the cylinder as shown in Fig. 4. Rod clevises provided by the cylinder manufacturers are usually too short when attached to an arm having a 90 deg angular rotation. Single acting cylinders with a spring return could also be used, however, they would cost more and be larger and/or operate at a higher pressure than those described in this paper.

Air cylinders having the diameters shown in Table 2 provided sufficient torque to operate the corresponding sized valves with an air pressure of 310 kPa (45 psi) or greater and a stroke length of 150 mm (6 in.). For cylinder uniformity and standardization, commercial availability, and convenience of fabrication, this stroke

†Manufactured by Green Hydraulics, Inc., Los Angeles, CA.

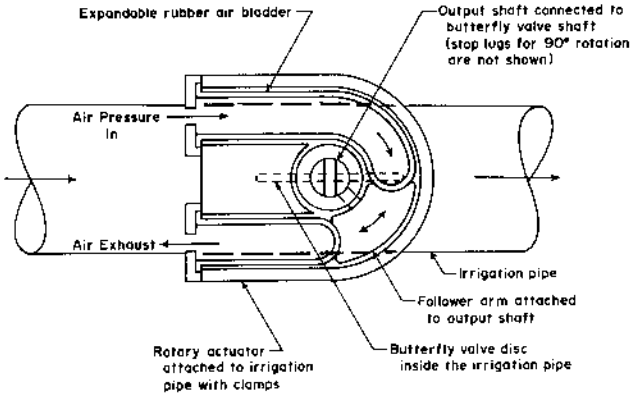

Fig. 3—Schematic section view of a rotary actuator used to operate a butterfly valve.

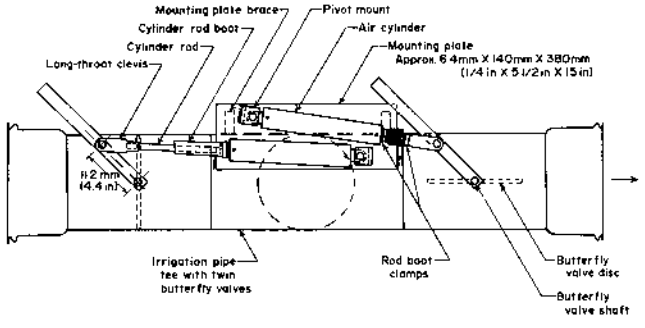

Fig. 4—Schematic drawing of air cylinders mounted on a twin butterfly valve tee.

TABLE 2. AIR CYLINDER DIAMETERS AND CORRESPONDING IRRIGATION BUTTERFLY VALVE SIZES FOR SYSTEMS WITH DIFFERENT WATER PRESSURES.

	Irrigation butterfly valve sizes	
	Water pressure	
Cylinder diameter	70 kPa (10 psi)	150 kPa (25 psi)
38mm (1.5 in.)	150mm (6 in.), 200mm (8 in.)	150 mm (6 in.)
44mm (1.75 in.)*	250mm (10 in.), 300mm (12 in.)	200mm (8 in.), 250 mm (10 in.)
50mm (2.0 in.)	300mm (12 in.)	250mm (10 in.), 300mm (12 in.)

* Not all manufacturers make 44 mm (1.75 in.) cylinders. Those used in these tests were made by Bimba Manufacturing Co., Monee, Illinois.

length was used for all cylinder and valve sizes. Since air leakage is more likely to occur when the cylinder rod is retracted, the cylinders should be mounted so that they are in the extended position for the greatest length of time, which is usually between irrigations. However, this also requires that the smaller cylinder "pulling" force be used to open the valve.

The cylinders must be corrosion resistant and have stainless steel rods and either stainless steel or brass bodies. The rod is covered with a canvas boot to keep it clean and to help prevent abrasive particles from being drawn back into the seal. The boots were made from a tightly-woven nylon canvas material and when placed over the rod were clamped to both the cylinder and the clevis as shown in Fig. 4.

Rotary Actuators

Certain rotary actuators are suited as operators for irrigation butterfly valves (see Fig. 3). Air pressure, applied to either side of the rotary unit, expands a bladder which pushes against a cup-shaped arm connected to the output shaft. The opposing bladder, on the other side of the unit, is exhausted and permits the output shaft to rotate to either open or close the valve.

The principal advantages of the air-bladder-driven actuator are (a) airtightness and (b) it is minimially susceptible to environmental damage. The actuator costs more than a comparable low-cost air cylinder, but its other advantages may outweigh the cost disadvantage. Two sides of rotary actuators are available which can provide the required 23 to 34 Nm (200 to 300 lb-in.) output torques when utilizing the relatively low pressures available from portable air tanks.

Pilot Valves

Double acting air cylinders and rotary actuators both require 4-way pilot valves for their operation. Automated surface systems normally use very small amounts of electrical energy at a number of locations and installing or extending power lines to provide this service is seldom feasible. Therefore, solenoid pilot valves for automating surface irrigation equipment need to operate without an electrical holding current.

Battery-powered solenoid valves are usually of three types: (a) dual coil spool valves, (b) dual coil poppet valves, and (c) reverse polarity latching valves. All of these use a momentary electrical energy pulse for actuation. The electrical pulse is commonly obtained by discharging a capacitor. Pilot valves of all three types were tested for use with the pneumatic operators. The dual coil spool valves were the most satisfactory considering their air tightness, availability in a 4-way configuration and compatibility with available timers or controllers and air pressures.

Two types of spool valves were used. The one selected for the later tests is a small brass double plunger valve fitted with low-resistance solenoid operators.‡ The solenoids are designed for AC voltage but can be used with DC voltage for momentarily energized applications. They were energized by the discharge from a 22,000 μfd electrolytic capacitor charged from a 12-V dry cell battery. The valve was air-tight when tested at pressures up to 860 kPa (125 psi), which was the highest pressure available from the portable air tanks. The other spool valve§ (Humpherys and Pauliukonis, 1983) is larger and uses 18,000 to 36,000 μfd capacitors charged from 22 1/2-V dry cell batteries. The operating air pressure is regulated to 530 kPa (75 psi) unless larger capacitors or higher voltages are used.

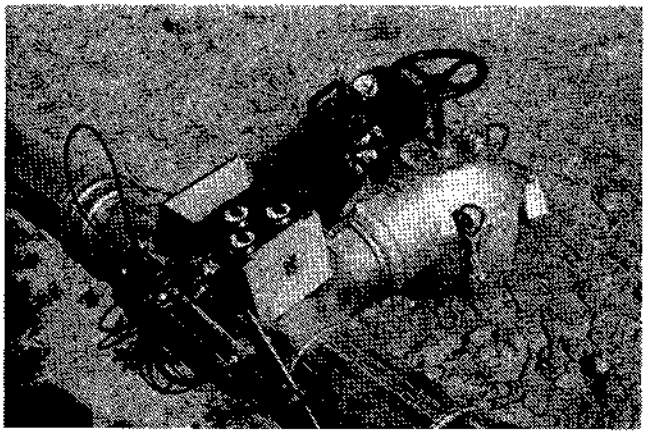

Fig. 5—Automated twin irrigation valve unit with 24-hour mechanical timers.

Timers and controllers

Mechanical, 24-h timers were primarily used to control the automated valves. Those seen in Fig. 5 have built-in electrical contacts.|| The timers are manually reset to charge the capacitors and when they "trip" at the end of their "set" time period, the capacitors are discharged to activate the pilot valve solenoids. Since two timing functions are required—one to open the valve and one to close the valve—two mechanical timers are needed for a single valve. For twin valves, three timers can be used if one of them serves two functions simultaneously.

Custom-made, battery-powered, quartz crystal and solid state electronic timers were also used. Centrally located programmable controllers may be used where AC electical power is available or where solar battery chargers are used. Controllers primarily designed for sprinkler irrigation must be compatible with the pilot valves that are used for automating surface irrigation systems.

Air tanks and associated components

Portable 27-L (7-gal) air supply tanks were used in this study, however, bottled gas (propane) tanks are also suitable. As shown in Fig. 1, the tank is fitted with a tank fill valve for recharging, pressure gauge, needle shutoff and throttling valve, filter, pressure regulator, quick-connect air line coupling and a drain plug or valve.

A needle shutoff valve is used to throttle the air flow for slow valve closure. This minimizes pipeline surge pressures, particularly in long pipelines. A pressure regulator conserves the limited air supply since the volume of air exhausted with each operation is less at reduced pressures. The pressure regulator must be a no-bleed, non-relieving type‡ which will not bleed air from the portable air tank.

Double-end shut-off, quick-connect, air line couplings are used to quickly disconnect the tank from the system for recharging and still retain pressure in both the tank

‡Clippard Instrument Laboratory, Inc., Cincinnati, OH. (MJV-4D valve with AVSC-12 solenoid operators).

§Patentrol Corp., Cleveland, OH.

||Frank W. Murphy Mfr., Inc., Tulsa, OK.

and the system's pneumatic operators. Both polyethylene tubing with compression fittings or similar size polyurethane‡ tubing with nipple type fittings were used for the air lines. The polyurethane tubing does not kink as readily as some thin-walled polyethylene tubing and is preferred for use with portable valves that are handled frequently. To assure air-tightness, teflon tape or a liquid anaerobic# thread sealant was used on all air line fittings.

The number of tanks that can be used before a central air supply system becomes more economically feasible depends upon the length of buried air line needed to serve the area, the availability of electric power, and the inconvenience of recharging the portable tanks.

Estimated costs

Components which comprise a valve unit are commercially available, but cannot be obtained from any one single source—ten different suppliers were used. Material cost for a single 250 mm (10 in.) valve unit, determined from 1982 prices in small-quantity lots, were:

Butterfly valve 250 mm (10 in.)	$100	
Air cylinder, 44 mm (1.75 in.)	55	
(Rotary actuator (BV-12)—alternate)	(150)	
Pilot valve	45	
Timer	55	
Air tank and associated accessories and fittings	80	
Total	$335	($430)

These costs do not include assembly labor and profit. The timer assembly cost was for a quartz crystal timer which required considerable assembly time. Materials for a dual-clock 24-h mechanical timer cost about $160, but the assembly labor is less than for the quartz crystal timer. Relatively low-cost electronic timers are expected to be available in the future.

FIELD TESTS

Both single and twin valves were installed on risers from buried pipelines and on field turnouts from supply ditches. They were used to control the flow of water into gated distribution pipes. One system used an experimental, centrally-located irrigation controller and air supply, but most valves operated independently.

One advantage of butterfly valves is that they can be used in systems having higher operating pressures than can water- or air-operated valves which have rubber diaphragms or bladders. They are also suited for use under very limited head conditions because of their relatively small head loss. The valves were field tested with water operating heads ranging from about 0.6 to 18 m (2 to 60 ft).

Several twin valves were used in surge irrigation (Stringham and Keller, 1979) tests such that only one valve was open at a given time and the flow was alternately sequenced from one outlet to the other automatically. After the surge portion of the irrigation was completed, both valves opened to complete the irrigation with reduced or cutback furrow stream sizes.

Field evaluation and problems encountered

Air cylinders both with and without extra rod wiper seals were still air-tight after two years of service. Only cylinders having stainless steel rods are now being used since carbon steel rods on three cylinders leaked after becoming rusted and moderately corroded during the first season. Air cylinders inspected as long as two months after being used were still pressurized, indicating zero leakage.

Small air leaks predominatly associated with leaking pilot valves occurred during the first year of testing. Improved pilot valves and greater care in assembling the components have eliminated most leaks. With minimal leakage, one 27-L (7-gal) size tank of air can last for a full irrigation season. It provides sufficient air to operate a 38-mm (1.5-in.) cylinder over 100 times (over 50 open/close cycles). This is usually enough for several surge irrigations.

On two occasions, a butterfly valve disc in a high head system, 18 m (60 ft), failed by breaking along the disc shaft. The manufacturer's pressure rating for this particular valve was 21 m (69 ft) of head. The failures were attributed to water hammer in the 400 m (1/4 mi) long supply line caused by the valve closing too rapidly. The original throttling valve was replaced with a needle valve having a finer adjustment and no further problems developed. Closing a valve against a relatively high head, or with a long length of pipe upstream, requires a slow valve closure to prevent surge pressures from developing.

A drop or two of good quality hydraulic oil should be placed in the cylinder and on the cylinder rod for lubrication once each year. Since air leaks from the cylinder most often occur around the rod seal, keeping the rod clean with a rod boot and proper lubrication will greatly extend the life of the cylinder.

Other problems encountered during the field tests include timer failures resulting from defective switches. This problem was alleviated by using a charging resistor to limit the capacitor inrush current which otherwise tends to burn the switch contacts.

The air lines may need to be protected from field rodents by keeping them a short distance above the ground. However, this was not a problem at any of the field sites where the valves were used.

Most automated devices have a malfunction potential and failsafe provisions should be built into the overall system design to neutralize the effects of a malfunction if it should occur. The most critical situation is usually when a valve fails to open and the system becomes closed with no outlet for the water. Pump-supplied systems can be protected from such an occurrence by a pressure safety switch to shut the pump off. Float-operated shut-off valves (Merriam, 1973 and Humpherys, 1978) can be used in most gravity systems supplied from canals or reservoirs. These provisions are normally part of an automated system and also become operative to reject water when the last valve closes to terminate irrigation. Failure of a valve to close is not so serious because this usually results only in the water remaining on one set longer than intended.

SUMMARY

Air cylinder and rotary actuator pneumatic operators were used to automate low pressure irrigation butterfly valves. Criteria and requirements for selecting and adapting components for this application were presented. Air to operate the valves was supplied by portable air tanks charged to about 860 kPa (125 psi).

#Lockite 242, Lockite Corp., Newington, CT.

Battery-powered, 4-way spool type solenoid pilot valves were used to control the pneumatic operators. The pilot valve solenoids were energized by capacitor discharge from 12- and 22 1/2-V dry cell batteries. The valves were field tested using 24-h mechanical timers, electronic timers and a centrally located programmable controller for control. All of the components in the valve package, except the experimental electronic timers, are commercially available but cannot presently be obtained from any one single source. The individually controlled automated valves are primarily intended to operate as independent units. Both twin valves in a tee configuration and single valves were tested. The twin valves are suited for irrigation such as surge or automatic furrow cutback where the flow is automatically sequenced from one outlet or leg of the tee to the other. The automated butterfly valves can be used with water pressures as high as 170 kPa (25 psi) where other air- or water-operated valves cannot be used because of the high pressure head. Because of their low head loss, they can also be used under limited head conditions where the available pressure head is too low for water-operated valves.

References

1. Boesch, B. E., A. S. Humpherys, and D. A. Young. 1981. How scheduling fits in the irrigation program in the Grand Valley of Colorado. Proc. Am. Soc. Agric. Engr. Irrig. Scheduling Conf., Dec. 1981, pp. 159-165.
2. Fischbach, P. E., and R. Goodding II. 1971. An automated surface irrigation valve. AGRICULTURAL ENGINEERING 52(11):584-85.
3. Haise, H. R., E. G. Kruse, M. L. Payne, and H. R. Duke. 1980. Automation of surface irrigation: Summary of 15 years USDA research and development at Fort Collins, Colorado, U.S. Dept. of Agriculture, Production Research Report No. 179, 60 pp.
4. Humpherys, A. S. 1978. Float valves improve pipeline systems. Irrigation Age 12(7):12, 15. April.
5. Humpherys, A. S., and R. L. Stacey. 1975. Automatic valves for surface irrigation pipelines. Proc. Am. Soc. Civil Engr., J. of the Irrig. and Drain. Div. 101(IR2):95-100.
6. Humpherys, A. S., E. Oest, and D. A. Young. 1983. Spring-operated semiautomatic irrigation valves. TRANSACTIONS of the ASAE 26(1):134-136, 140.
7. Humpherys, A. S., and R. S. Pauliukonis. 1983. Momentarily-energized pilot valves for irrigation systems. TRANSACTIONS of the ASAE (in press).
8. Merriam, John L. 1973. Float valve provides variable flow rates at low pressures. Proc. Am. Soc. Civil Engr. Irrig. and Drain. Div. Spec. Conf., Fort Collins, Colorado, pp. 385-402.