The 'Poor Man's Marker'

Improving the accuracy of small rigs

By Truman Massee, William Luellen, Harold Waggoner, and Mike Mumm

Gaps or overlaps in spray patterns are costly. But the various boom-end marking systems available for sprayers can be costly also—as much as $1,000 in some cases—so many farmers and custom applicators have elected to do without.

The USDA has come up with a system that can mark a field with long-lasting foam at an initial cost of about $3 for materials and an operating cost of a few cents per acre. (This operating cost does not include your time, of course, since it would be about the same regardless of the marking system you use.)

You can build the marker yourself using a few scraps of plastic pipe, some string, and a few other odds and ends.

The marker uses foam from an ordinary 11-ounce can of shaving cream. The developers of the unit tried using other items, including spray paint cans, as the marking medium, but none showed up well enough on the ground.

Unlike some other marking foams, shaving cream will last a long time. The marker's developers placed a blob of shaving cream foam on the ground on a hot day. The blob was still there, about two-thirds the original size, 24 hours later.

There has been a problem with all foam marking systems—even the expensive ones—with wind displacing the foam blobs. With the "Poor Man's" system we have had foam move more than the spray as it fell to the ground on a windy day, but little or no movement once it was on the ground.

We are not saying this $3 system is better than or even equal to an expensive system. The foam blobs it puts out are smaller, for instance; which means they are not as visible on rough ground or in heavy residues. Considering the costs involved, though, the "Poor Man's Marker" might be the only alternative for a small operator.

Operation

If you were to hold the nozzle down continuously you would get about a 60-second squirt of foam. So if you were to make 1/2-second squirts you should be able to get about 120 shots per can. Making such a squirt every 200 feet will allow you to spray and mark 11 to 20 acres, depending on conditions, before needing to change cans at each end of a 25-foot boom.

The spray cans sit in sockets made of 3-inch diameter ABS plastic pipe which are attached to the ends of the spray boom with ordinary high-pressure hose clamps. A home-made trigger on top of the socket presses down on the button of the spray can when a string attached to that trigger is pulled from the operator's seat on the spray rig or tractor. Since the design was developed by federal government employees it is not patentable.

Construction

Begin with 18 inches of 3-inch ABS plastic pipe. With a hacksaw, cut two pieces, each of them 7-1/2 inches long. These will be the sockets for the shaving cream cans. The

The white blob on the ground is a lump of shaving cream dropped by the marker on the end of the boom.

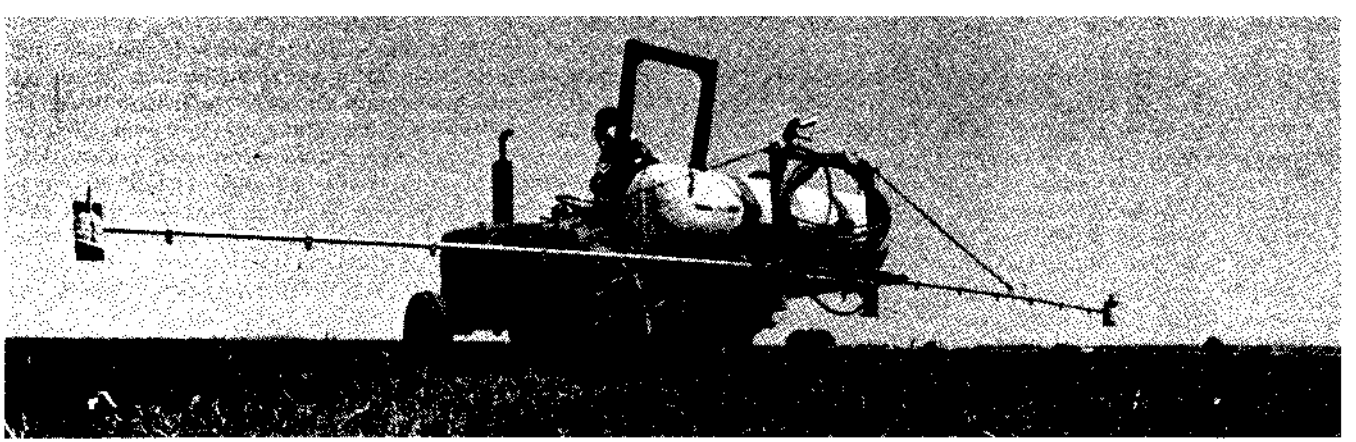

Close-up of the marker releasing another blob of foam. Note the tractor operator pulling the string.

remaining 3 inches of pipe will be used for the triggers and reinforcing strips.

The trigger is perhaps the trickiest part of this. We have included a full-size pattern which you can either cut out of the magazine or trace onto another piece of paper. From the pattern, mark the triggers onto the 3 inches that remain of your 18-inch pipe section, using a white or light coloring crayon or welders soapstone. You will also be cutting two reinforcing strips, each 1 inch high and 3 inches wide out of this section of pipe, so conserve material like your wife does when she cuts out a dress.

Before cutting out the triggers, note the "bottom view" in the drawing. The edges of the triggers are beveled as shown so that you will have a flat side that can later be drilled. It is important that your cutting of the triggers be done correctly. Now with a hacksaw, cut out the triggers and reinforcing strips.

Drill three holes in the triggers as indicated—two that are in line for a bolt and one for the pull cord. The precise size of these holes is not important, just make them somewhat larger than the bolts and string that will go through them.

Back to the socket pieces, use a hacksaw to cut a slot 1-1/2 inches deep for the nozzle. There will be some other cuts to make in these sockets, but do not make them yet, in case you decide you need to move the nozzle slots by abandoning the first ones and cutting new ones somewhere else around the top of the tube.

Next drill a hole in the socket pieces near the nozzle slot for the bold that will hold the trigger in place. One socket gets a hole drilled on one side of the nozzle slot while the other socket is drilled on the alternate side. Or, if you drill holes on both sides as illustrated, you will have a unit that may be used on either a right or left boom end. The placement of the matching bolt hole (opposite of slot side) determines how level and well centered the trigger's firing pin is over the spray can thumb button. To locate this hole, wrap a shaving cream can with cardboard shim and slip it into the socket at its estimated working height. Now the can's thumb button itself may be used as a guide. Place the trigger into the socket in its working position and thread the bolt through the existing socket and trigger holes. We initially get the trigger in backwards about half the time, so don't be alarmed if you do too. Manually adjust the can and trigger's final position, and it will be evident where the hole should be drilled to retain the trigger there. Mark it, disassemble the unit, and drill it.

Next you will drill the holes that will hold the bolt that will keep the can from falling out of the bottom. Again, by having the can in place, and also with the trigger bolted in place, they serve as a guide. This time, however, the can will be about 1/8 inch higher than before, and here are the reasons why; There may have been some "slop" between the bolt and bolt-hole to be taken up. More important, the smoothest firing pin action is obtained when the trigger rotates to just upright when actually activating the can's thumb button. Test to obtain this height, mark the holes, disassemble and drill.

If you are not entirely happy with things as they are, you can change either the bottom bolt, moving it up or down, or change the location of the spray nozzle slot and start over again.

Once you have things as you want them, it is time to cut the holes that will allow attachment of the unit to the spray boom. Cut two D-shaped holes, as shown in the drawings, so there is a 1-inch band left for the attachment. Take the 1-inch wide reinforcing strip you cut and glue it on top of this strip, to make it stronger. The common types of "super glue" work fine for this gluing task.

Once the glue is dry, you will need to file the outside of the reinforcing strip down somewhat so that it will fit snugly against the spray boom. The threads of a large bolt work better than most files for hollowing out the strip to fit a round boom. Also some filing will be needed so the hose clamp can seat when tightened. Temporarily slip the clamp into place and note if there aren't some shoulders that it will ride up on unless they are shaved off.

The final step (aside from mounting onto the boom) is to attach a small length of tubing to the spray can nozzle so that the blobs of shaving cream will fall onto the ground where you want them instead of piling up inside the spray socket. Use 4 to 5-inch length of 1/4-inch inside diameter soft plastic "Tygon" tubing.

Roughen the inside of one end of the tubing and also the outside of the shaving cream can nozzle with sandpaper, then apply an "all-purpose" (such as "Seal-All") or epoxy-type to glue the two together. Cut two slits at the other end of this tubing so it can splay out and increase the size of the foam blob. After using up the can of cream

Top, the assembled marker; bottom, the components. The cardboard shim is behind the mounting housing. The shaving cream can already has the distribution tube attached to the nozzle. The two long bolts hold the trigger and can in place.

in the field, these cap-tubing units can be snapped off the empty cans and used on full ones.

Then mount your units on the boom, using hose clamps, and rig up the pull cords from the triggers to the tractor seat. You may need to use some long eyebolts or other devices for line guides to keep the cords from tangling. An old piece, or several short pieces of garden hose that is rigged like a carburetor choke cable and taped onto the boom itself will work well with some spray units.

If, as you are working on and with this, you come up with some improvements, please report them to us so that we can pass them on to others that are using or making them. ■

TRUMAN MASSEE *is a soil scientist and* HAROLD WAGGONER *is a research technician, both with the USDA-ARS Snake River Conservation Research Center at Kimberly, Idaho.* MIKE MUMM *is a research aide with the University of Idaho's research and extension center, also at Kimberly.* WILLIAM LUELLEN *is editor of* CROPS AND SOILS MAGAZINE.

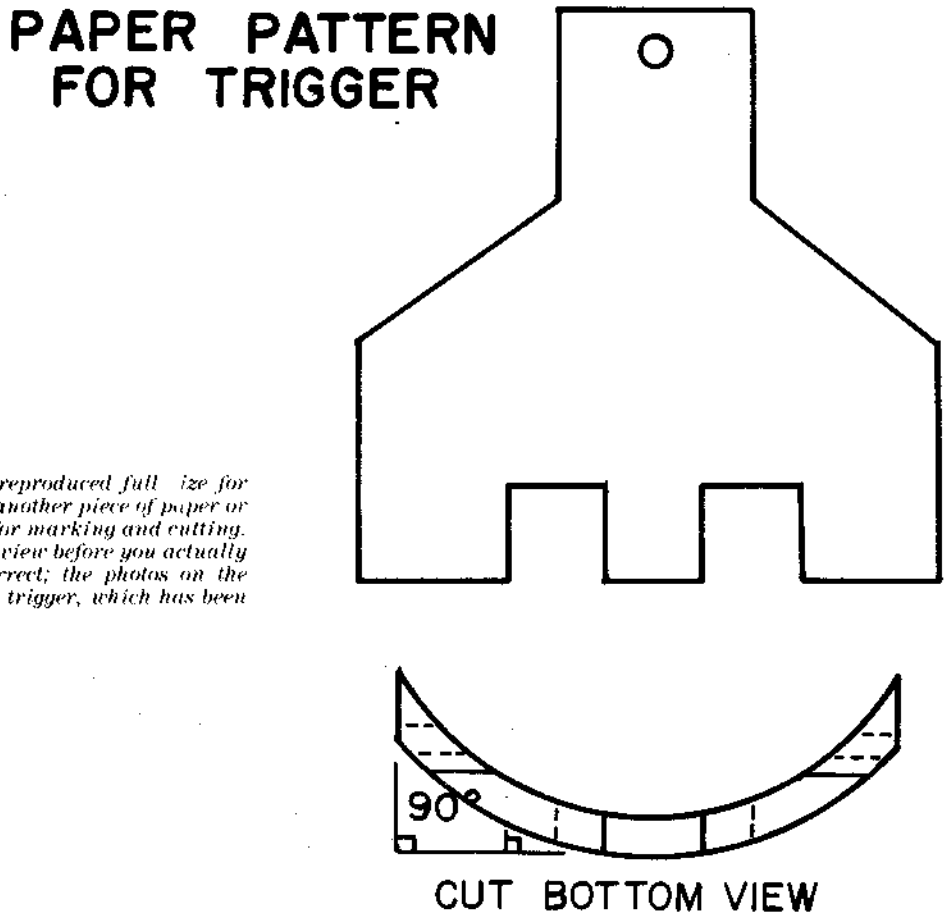

The paper pattern for the trigger is reproduced full size for your convenience. Either trace it onto another piece of paper or cut this one out and lay it on the tube for marking and cutting. Note the angle of the cuts in the bottom view before you actually start sawing. The bottom view is correct; the photos on the opposite page show a slightly different trigger, which has been redesigned.

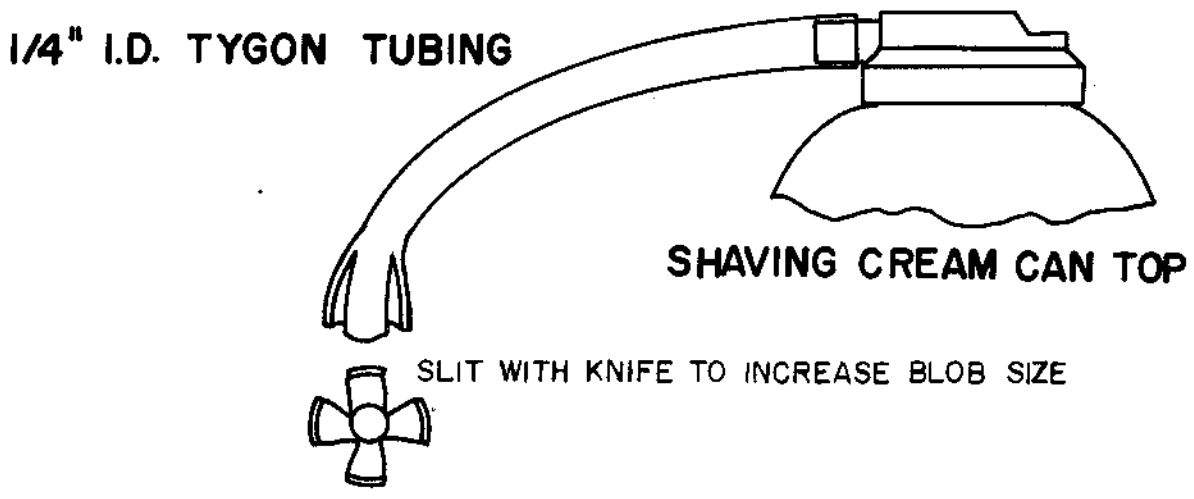

Assembling the unit. This drawing shows how all the components go together and also the size and location of the various holes and slots.

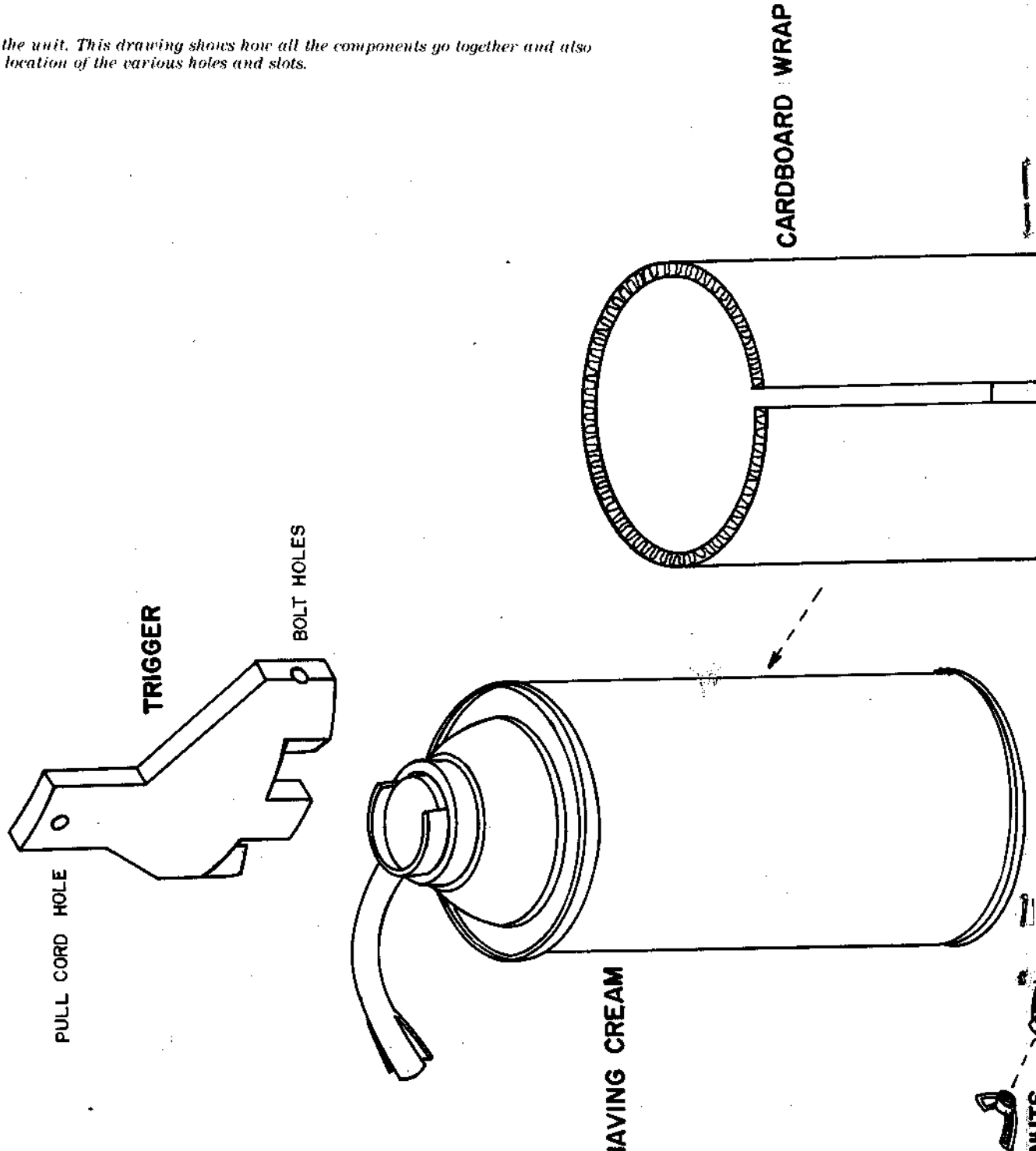

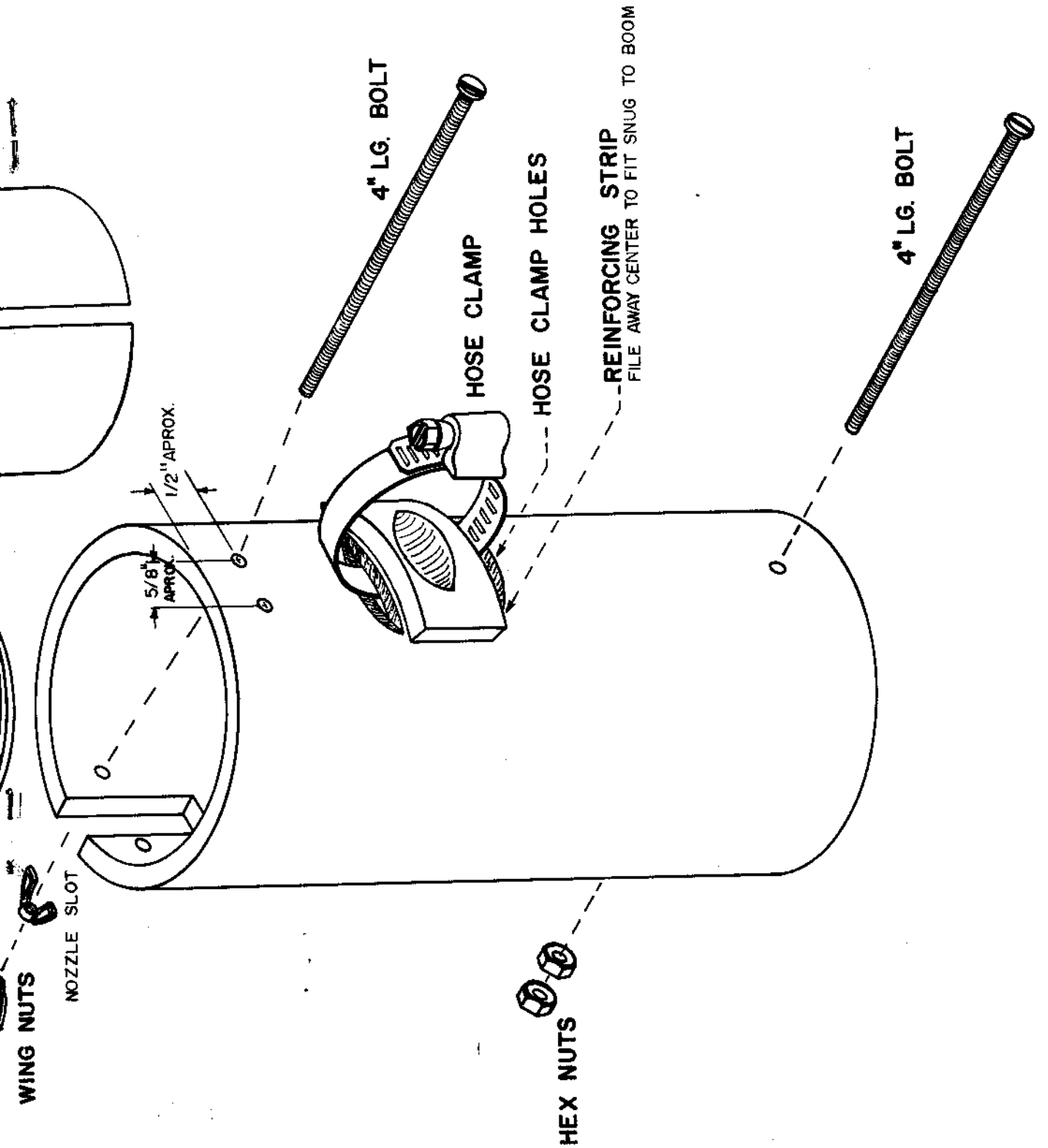
4" LG. BOLT
HOSE CLAMP
HOSE CLAMP HOLES
REINFORCING STRIP
FILE AWAY CENTER TO FIT SNUG TO BOOM
4" LG. BOLT
1/2" APROX.
5/8" APROX.
WING NUTS
NOZZLE SLOT
HEX NUTS

United States Department of Agriculture
Agricultural Research Service
Northwest Area
Snake River Conservation Research Center
Route 1, Box 186
Kimberly, Idaho 83341

Thank you for your request for information about the USDA "Poor Man's" Marker. We published construction plans for this in the November, 1984 issue of Crops and Soils Magazine, and a reprint is enclosed. As the article indicates, the marker makes smaller blobs than the more expensive commercial ones. Thus, its usefulness is restricted where the ground is rough or where there is much residue. Further, some operators have had problems with pull cords tangling when the booms swing and jolt on rough ground, sometimes resulting in the trigger being left pulled "on", and losing a can of shaving cream in one continuous dispensing action. In these cases, threading a plastic pull cord through an old garden hose like a pull choke for a carburator has helped.

One does need to have enough time ahead of spraying to examine whether a completed marker is working properly - no amount of instruction can take the place of the operator's ability to observe. Thus, for the operator who is willing to observe, and who has ideal enough spraying conditions so the marker has a chance to help, it beats standing up while driving the spray rig and hunting for old wheel marks.

Best wishes,

Truman Massee

TRUMAN MASSEE