Pressure Sensor Configurations for Open Channel Flow Recorders

Thomas Trout
MEMBER
ASAE

This article is reprinted from APPLIED ENGINEERING IN AGRICULTURE (Vol. 2, No. 2, pp. 129-132, 1986)
Published by the American Society of Agricultural Engineers, St. Joseph, Michigan

ABSTRACT

PRESSURE transducers can be used to sense water depths in open channel flow measurement devices. In the low pressure range, the water-air interface must be eliminated by purging air from the system or the interface must be carefully controlled. Submersible transducers can be fitted with an air vent tube to allow automatic air purging. A portable bubbler system, which maintains the interface at the pressure tap, can be made from a propane filled bottle, a pressure regulator, and a snubber fitting. A pressure cell with a large air-water interface-to-air volume can transmit water pressure to a sensor through a trapped air volume with minimal reference elevation fluctuation.

INTRODUCTION

Float activated mechanical chart recorders have been used to log open channel flows for many years. Advances in electronic technology have made available less bulky, more reliable, and easier-to-use data logging equipment. Data logging equipment requires an electrical signal which can be related to the water depth in a flow measurement device. Equipment used to convert water levels to electronic signals includes float-potentiometer or float-shaft encoder arrangement, capacitance strips, ultrasonic devices, and pressure transducers. Capacitance and ultrasonic devices are commercially available but are fairly expensive. Float activated devices tend to be cumbersome due to the need for a stilling well and support platform and have the reliability problems associated with the mechanical interface.

Pressure transducers convert water pressure (or depth) to an electrical output which is proportional to the pressure. Their small size allows several configurations of portable flow loggers. Most pressure transducers are not designed to easily purge air from the pressure capsule. Reading errors due to air trapped in the transducer or pressure lines can be significant at the low pressures created by water depths in open channel flow measurement devices.

This paper describes three sensor configurations that control the air-water interface and thus allow standard pressure transducers to accurately sense water depths in small open channel flow measurement devices such as flumes. All three configurations are compact and require no power beyond the transducer excitation, and thus can be used with portable logging equipment at remote sites.

THE PROBLEM

Due to the mass difference between air and water, trapped air in non-horizontal lines or in transducer pressure capsules will affect the pressure at the sensor as it affects the water level in a manometer. Also, surface tension at air-water interfaces will cause unpredictable apparent pressures which will vary with the line or fitting geometry and materials, the water purity, and the shape of the interface. For example, in 6 mm (0.25-in) polyethylene tubing which has a 4 mm (0.17-in) inside diameter (ID), surface tension can create an apparent water pressure head of as much as a 6 mm (0.02 ft) of water. Since surface tension varies inversely with the square of the cavity or tube size, the effects can be even larger in fittings or in a small transducer pressure capsule or the corners of a larger capsule.

Errors of this magnitude are often unacceptable in open channel flow measurement where water depths must be recorded to within 3% to 5% of the flow depth to maintain ±7% accuracy (Bos et al., 1984). In small measurement devices, water depths often must be recorded to the nearest 2 to 5 mm (0.006-0.015 ft). Consequently, either the air-water interface must be eliminated by completely filling the sensor and pressure lines with water, or interface must be carefully controlled.

Pressure transducers have traditionally been used in high pressure applications where the effect of trapped air in the sensor is neglible, so most are not constructed with bleed ports which allow air to be purged from the sensor. Although air in pressure lines could be bled external to the sensor, this would leave an air-water interface and a trapped air column. Air expansion or contraction due to temperature or pressure changes will change the interface shape and the surface tension-caused pressure.

Bubblers have been used for many years to maintain pressure lines to the sensor full of air and control the air-water interface at the pressure tap. Bubblers normally use a pump to keep the lines purged, which is inconvenient for portable equipment or remote sites due to bulk and power requirements. The mechanical pump also decreases the reliability of the logger.

Consequently, special sensor configurations are required to use pressure transducers to accurately sense low liquid pressures for open channel flow logging.

SENSOR CONFIGURATIONS

Submersed Sensor

Submersible transducers (i.e., Bell and Howell BHL

Article was submitted for publication in February, 1986; reviewed and approved for publication by the Soil and Water Div. of ASAE in August, 1986.

The author is: THOMAS TROUT, Agricultural Engineer, USDA-ARS, Snake River Conservation Research Center, Kimberly, ID.

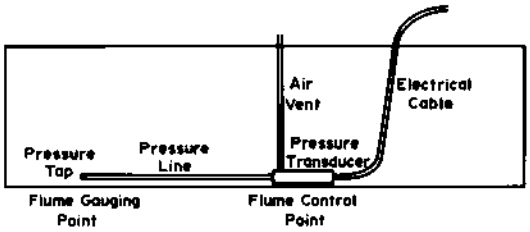

Fig. 1—Submerged sensor configuration mounted on a flume outer sidewall.

4104 and Druck PDCR 10/D)* are made to sense pressures in wells and tanks. They have water-tight enclosures and a microtube reference pressure vent encased with the electrical cable.

A submersible transducer generally cannot be placed directly in the flowing water inside the measurement device because it interferes with the hydraulic characteristics of the device. It can be mounted in a stilling well. However, the stilling well is not necessary if the transducer is mounted on an outer side wall of the measuring device with the water pressure transmitted to the transducer via a tube from a tap at the gauging point, as shown in Fig. 1.

The submerged pressure transducer can be modified to purge air automatically from the pressure line and sensor by attaching an air vent line directly to the upward side of the capsule in which the pressure sensing element is emersed. The capsule can be part of the transducer or custom made to enclose the transducer sensor diaphram. The vent line is run vertically up the flume side wall above the sensor. When water enters the flume, air is purged through the lines and sensor, and out through the vent line. The vent line fills with water and acts like a manometer from which visual readings of pressure head could also be made. Blowing or back flushing through the vent will clear the pressure line of any accumulated sediment or trash.

This arrangement allows the sensor to be mounted at the measurement device control section or throat, since the reference elevation is at the control section. The pressure line transfers the measured head from the gauging point to the control point which reduces the sensitivity of the device to leveling errors (Bos et al., 1984). The mounting arrangement also usually results in the sensor being covered by water or soil, and thus not being subjected to full air temperature fluctuations.

Bubbler Systems

By maintaining full of gas a line between the sensor and a tap at the gauging point, the pressure (water depth) at the gauging point is transmitted to the transducer, essentially unchanged, due to the very low mass of the gas. This allows the transducer to be placed above and away from the water in an instrument shelter. To keep the line full of gas, enough must be added to replace any gas leakage and volume decreases due to temperature decreases and pressure increases. This is normally accomplished with a pump.

*Trade and company names are included for the benefit of the reader and imply no endorsement or preferential treatment of the product by the United States Department of Agriculture.

For a small diameter and air-tight tubing, the rate of gas flow required by a bubbler system is very small and could be supplied from a pressurized container. A gas which changes phase at relatively low pressure and normal air temperature, such as propane, allows a large volume of gas to be stored in a small, lightweight container. A 450 g (16 oz.) propane bottle, such as is used for camping stoves, contains 230 L of propane gas (at standard temperature and pressure). If this is metered out at 5 mL/min (about one bubble every 1 or 25 sec.—more than adequate to keep bubbler lines purged), the bottle will maintain a gas flow for over one month.

Inexpensive porous stainless steel snubber fittings, used to protect pressure gauges from pressure surges, are available which will pass about 5 mL/min at a 20 kPa (3 psi) pressure drop. Some regulator valves supplied for propane bottles are capable of maintaining this low pressure. After testing several regulator valves, a Coleman Propane Assembly (#5445A5561) connected with a Cajon snubber fitting (B-4-SRA-2-EG) was chosen. The Coleman regulator valve was easy to adjust and less sensitive to temperate changes than other regulators tested. The snubber screws into the regulator and the regulator attaches directly to disposable propane bottles, or, through an adaptor, to refillable bottles. These assemblies have been used in the field to meter out the 450 g (16 oz) of propane in disposable bottles in 3 weeks to one month. Larger refillable bottles have been used over a complete irrigation season. Propane bottles contain liquid propane and thus must be kept upright. Fig. 2 shows the bubbler logger assembly.

As bubbles form and release at the flume tap, the surface tension changes and cause cyclic pressure fluctuations in the bubbler line. The fluctuation range will depend on the tap diameter and geometry. For example, with a 6 mm (¼ in.) ID tap, the fluctuation will be about 4 mm (0.013 ft). The effects of this fluctuation can be reduced by shortening the bubble cycle or extending the logger sampling time so the bubble cycle is less than the logger sampling time, since most loggers record an average value over the sampling time. Averaging several sensor readings, using a large diameter tap to minimize surface tension effects, or providing damping in the transducer inlet line can also reduce reading fluctuations.

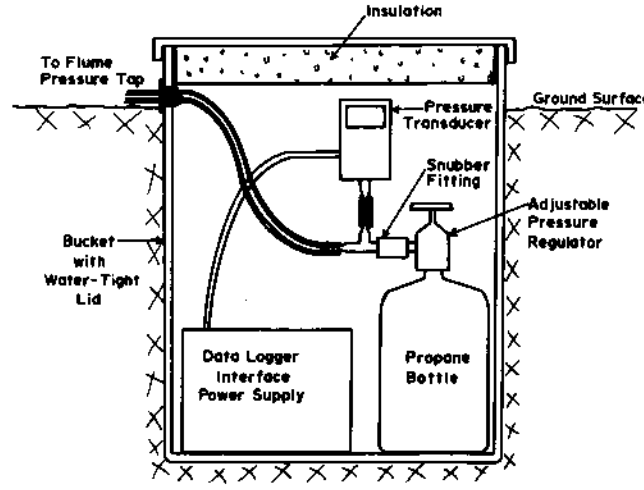

Fig. 2—Propane bubbler mounted in a buried bucket.

At low gas flow rates, the orientation of the pressure tap can also affect pressure fluctuations. Water can partially fill an upward opening or large-sized horizontal tap between bubbles and readings will vary with gas flow rate. The 5 mL/min flow rate was sufficient to keep water purged from a horizontal 6 mm ID tap. A vertical downward tap into a stilling well would prevent this potential problem at any gas flow rate and tap size.

An advantage of bubbler systems is that the complete logger assembly is independent of the flume. Consequently, one logger can be moved to several different flumes. The reference depth is the tap depth, so to use the same system calibration, the taps must all be at the same level relative to the flume control point. Other advantages of bubblers are that the transducer components will be isolated from the water and any chemicals or other contaminants in the water, and the positive pressures in the bubbler line should keep sediment and trash flushed out of the line. However, field experience indicates that in heavily sediment-laden water, enough sediment can accumulate at the tap to sufficiently restrict the gas flow and cause intermittent increased pressure pulses in the bubbler line.

The main disadvantage of bubbler loggers is the addition of a gas supply component which can fail and requires servicing. Adhesives used in a few transducers are sensitive to organic gasses and they may not be usable with a propane bubbler.

Most transducers are affected to some degree by temperature fluctuations. By partially burying the shelter in the soil and insulting the lid, as shown in Fig. 2, the soil heat capacity will reduce inside temperature fluctuations to about 20% of outside diurnal air temperature fluctuations. The shelter must be vented to the atmosphere to maintain the atmospheric reference pressure.

Propane is a combustible gas, so any installation utilizing propane must be marked and regulated. Ventilation of the instrument shelter can reduce the accumulation of leaked propane. The partially buried shelter will pose a special danger since propane is heavier than air and will accumulate in the container. All fire or spark sources must be avoided when servicing a bubbler system using propane in a buried container.

Pressure Cell

The purpose of a bubbler is to maintain the pressure line between the pressure tap and the sensor full of gas. In an air-tight system, only temperature decreases or pressure increases will cause the gas volume to decrease and allow water to enter the line. A 25°C (45°F) temperature decrease or 400 mm (1.3 ft) pressure head increase causes only a 5% volume change in a gas. A pressure cell with a large air-water interface area relative to the trapped air volume will minimize the effects of this small volume change, allowing the bubbler to be eliminated.

A simple pressure cell is shown in Fig. 3. An inverted cup with a pressure line leading from the top is inserted into a container of water. The pressure of the air in the pressure line is equal to the elevation difference of the water surface inside and outside the cup. As long as the gas volume change is small relative to the cup diameter, the water surface inside the cup will remain fairly constant relative to the cup and the water head can be referenced to the cup elevation. The large cup diameter also minimizes surface tension effects.

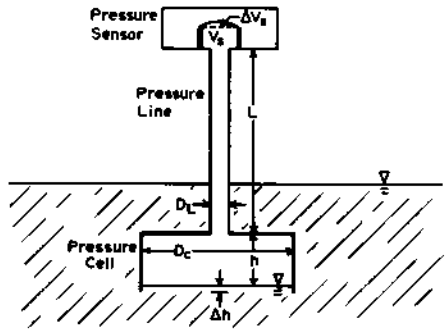

Fig. 3—Pressure cell.

The cup or cell water surface level change, Δh, with a percent gas volume change, ΔV_g, can be calculated by:

$$\frac{\Delta h}{\Delta V_g} = \left[L\left(\frac{D_L}{D_c}\right)^2 + h + \frac{4V_s}{\pi D_c^2} \right] /100 \quad \ldots\ldots\ldots [1]$$

where

L = the length of the pressure line
D_L = the inside diameter of the pressure line
D_c = the inside diameter of the pressure cell
h = the air column height in the pressure cell
V_s = the sensor pressure capsule volume.

For example, if a 1 m long 4 mm ID pressure line is used from the cell to a pressure sensor with a positive pressure capsule volume, V_s, of 1000 mm³, the water surface in a 10 mm long and 40 mm diameter cell would move only 1 mm with a 5% air volume change. Consequently, the bubbler can be replaced by a pressure cell with only a small change in the reference elevation if the pressure line is not long, the gas volume stored in the sensor is small, the sensor capsule volume change over the pressure range, ΔV_s, is small, and the transducer and lines do not leak.

Figs. 4 and 5 show two pressure cell designs. The bottom of the pressure cell has been enclosed to eliminate the need for a stilling well. The cell is connected, via a pressure line, to a tap in the side of the flume at the gauging point. An air vent, located slightly higher on cell wall than the inlet and attached to a tube which runs up the side of flume, allows air to escape until the water level reaches the top of the vent. Thus, the water surface inside the cell reaches the same elevation each time the cell fills. This is the reference elevation for the pressure sensor. Calibration of the sensor on the flume will

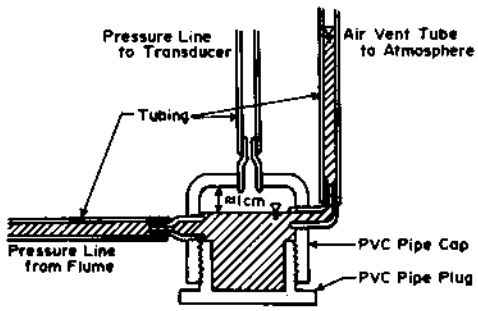

Fig. 4—Pressure cell made from a PVC pipe cap and plug.

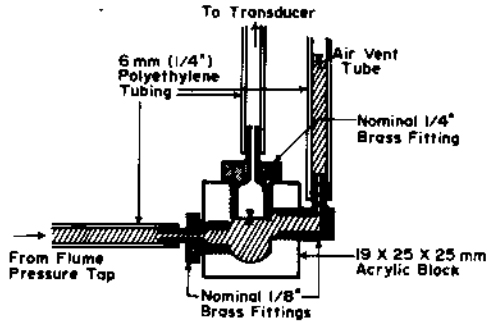

Fig. 5—Small pressure cell for furrow flumes.

establish the flume reference (zero gauge) reading. Water fills the vent tube to the pressure head at the gauging point, so the tube can be used as a monometer to measure head.

Fig. 4 shows a cell made from a 43 mm ID nominal 1¼-in PVC threaded pipe cap and plug. When used with a sensor with a small capsule and diaphram, such as the Micro Switch 160 PC ($V_s = 18$ mm^3, $\Delta V_s \cong 0$), mounted on the outer side wall of a field channel sized flume ($L <$ 400 mm), the water level in the cell should not fluctuate more than 0.7 mm with normally expected conditions. A similar arrangement could be used with transducers with larger capsules and diaphrams (i.e., Robinson-Halpern 152 or Schaevitz P-3061). However, due to the larger transducer capsule volume ($\cong$20,000 mm^3) and volume change with pressure ($\cong$1500 mm^3 over the full range), the pressure cell diameter would need to be about three times larger to maintain Δh to 1 mm.

If the PVC plug is not threaded beyond the top of the vent, these threads, as well as the inlet and most of the vent fitting will be under water, eliminating the possibility of any air leakage through them. Thus, air leakage can only occur in the connections between the cell and the transducer. Any water level rise in the cell due to air leakage can be checked by taking a sensor reading, blowing through the vent tube until air bubbles from the tap, allowing the cell to refill and rechecking the reading. Any time the cell is drained by this process or by water leaving the flume, the cell water level is reinitialized.

Fig. 5 shows a smaller version of the pressure cell used on small furrow flumes with Micro Switch 164 PC pressure transducers. Since the pressure line is only about 100 mm long, a smaller, more compact cell was made from a block of 19 mm (¾-in) thick acrylic drilled and threaded for brass pipe fittings. The top of the vent is located higher than the bottom of the transducer line fitting, which thus acts as the inverted cup in Fig. 3. Due to the small diameter openings in the fittings, 10 to 20 mm of head is required to overcome surface tension and initially fill the cell. Larger diameter tubing and fittings would reduce this problem.

Both of these pressure cells are best mounted at the measurement device control point, as was the submersible transducer, to translocate the head from the gauging point to the control point and reduce potential leveling-caused errors. The cells can be attached to the flume wall or under the sill. Fig. 6 shows a cell on the side of a portable broad crested weir flume.

Sediment can accumulate in the pressures lines or cell after several refills with sediment-laden water, and may

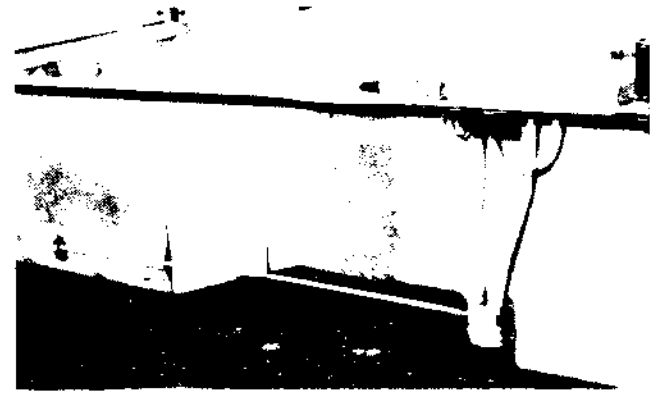

Fig. 6—Pressure cell and transducer mounted on a flume.

interfere with pressure transfer or proper cell operation. The sediment can be dislodged by blowing gently through the vent line, or removed by back-flushing with clean water through the vent line or disassembling the cell.

EVALUATIONS

Portable flow recorders were assembled using each of the three sensor configurations and evaluated both in the laboratory and under field conditions. All three sensor configurations repeatedly calibrated in the laboratory to within the pressure transducer tolerances (within 1% of full scale reading of a best straight line). Bubbler system accuracy is limited by the pressure fluctuations caused by the bubble formation at the tap.

Two submersible units, four bubbler units, and four pressure cell units were used in the field for two summers. All units operated with comparable accuracy and few operational problems were experienced. In two instances when heavily sediment laden runoff water was measured, sediment accumulated around the bubbler tap restricting gas flow and causing occasional increased pressure readings. Sediment accumulated in pressure cells used under the same conditions. Detailed descriptions of the complete flow recorder units and evaluation information is given in Trout (1984).

SUMMARY

1. When low liquid pressures are sensed, the sensor and pressure line must be completely filled with liquid or the air-liquid interface must be controlled.
2. An air vent line will allow air to purge automatically from submersible sensors.
3. A reliable, simple bubbler with no power requirement and a 3-week service interval, can be made using a small propane bottle, pressure regulator and snubber fitting.
4. A pressure cell can maintain a reference elevation constant to within ± 1 mm while transferring liquid pressure through trapped air to a nearby sensor, thus eliminating the need for a bubbler.

References

1. Bos, Marinus G., John A. Replogle, and Albert J. Clemmens. 1984. Flow measurement flumes for open channel systems. John Wiley and Sons, New York.
2. Trout, Thomas J. 1984. Electronic recorders for flow measurement flumes. ASAE Paper No. 84-2597. ASAE, St. Joseph, MI 49085.