CENTER-OF-PRESSURE GATES FOR IRRIGATION

A. S. Humpherys
MEMBER
ASAE

ABSTRACT

Center-of-pressure gates, sometimes referred to as pressure gates, were developed and field tested to semi-automate basin and border irrigation systems. The gates use the principle of hydrostatic pressure distribution for operation and are constructed with a pivot shaft located at approximately one-third the water depth above the bottom of the gate. They automatically open with an increment of water level rise in the ditch which is created when companion drop-closed gates close. They can also be equipped with a latch to be activated by a timer or other means. A generalized procedure was developed for designing trapezoidal-shaped pressure gates used in concrete-lined ditches. Pressure gates are being used and field tested in two semi-automated irrigation systems.
KEYWORDS. Irrigation systems, Pressure gates.

INTRODUCTION

Several types of gates are used in automatic and semi-automatic farm irrigation systems. Gates are used at field turnouts into basins and borders, as check gates in supply and distribution ditches, and at ditch diversion points on a farm. Center-of-pressure gates, sometimes simply referred to as pressure gates, are either semi-automatic or automatic gates constructed to utilize the principle of hydrostatic pressure distribution for operation. They have been used in a number of different applications. Reynolds (1968) reported their use in Hawaii for semi-automating sugar cane irrigation while Bowman (1969) used them in radio-controlled distribution systems. Their use as check and turnout gates in lined and unlined ditches was described by Humpherys (1969a, 1969b). Most of these have been rectangular, vertically oriented gates; however, they can also be trapezoidal-shaped for use in concrete lined ditches.

Recently, basins and borders near Delta and Eskdale, UT, were semi-automated to control stream sizes ranging from 250 to 340 L/s (9 to 12 cfs). Check gates in these systems serve as companion gates to drop-closed turnout gates. Center-of-pressure gates had not previously been used for these stream sizes and their corresponding, lined ditch sizes. Accordingly, a generalized procedure was developed for designing pressure check gates for trapezoidal-shaped lined ditches. Prototype gates were tested in the irrigation laboratory and then field tested.

The purpose of this article is to describe center-of-pressure irrigation gates with emphasis on their use in lined, trapezoidal ditches which are components of semi-automated farm irrigation systems. A generalized design procedure is presented along with a description of the field tests. General design considerations for vertical, rectangular gates are also noted.

PRINCIPLES OF OPERATION

A fundamental principle of hydrostatics is that the force, F, on one side of a submerged plane surface is the product of the area, A, of the surface and the pressure at the centroid of the surface. Referring to figure 1, the force is expressed in differential form as:

$$dF = \gamma h \sin \alpha \, dA \tag{1}$$

where γ is the weight per unit volume of the liquid. From equation 1:

$$F = \gamma \sin \alpha \int h \, dA \tag{2}$$

the integral $\int h \, dA$ is also the first moment of the area about an axis at 0 expressed as:

$$\int h \, dA = \bar{h} A \tag{3}$$

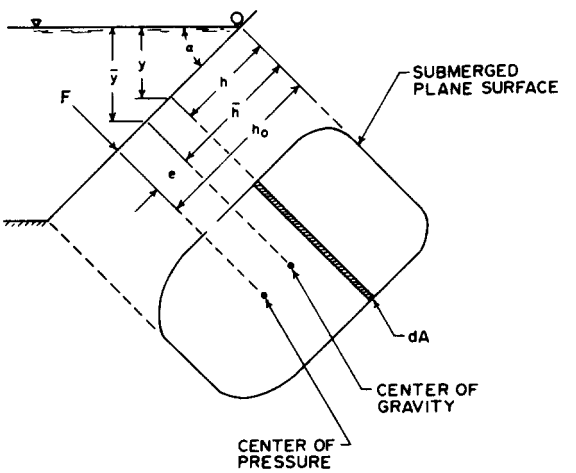

Figure 1–General diagram of pressure forces on a submerged surface.

Article was submitted for publication in June 1990; reviewed and approved for publication by the Soil and Water Div. of ASAE in October 1990.

The author is **A. S. Humpherys**, Agricultural Engineer, USDA-ARS, Kimberly, ID.

where $\bar{h}$ is the distance from the axis to the center of gravity of the surface. Substitution into equation 2 along with the relation, $\bar{h} \sin \alpha = \bar{y}$, yields:

$$F = \gamma \bar{y} A \tag{4}$$

For a rectangular surface, the center of gravity is at the center of the surface and $\gamma \bar{y}$ is the average pressure exerted by water on the surface.

For some applications, such as the center-of-pressure check gate, it is necessary to know the location of the resultant force on the surface so that moments can be determined about an axis. The resultant force acts perpendicular to the surface, and the point at which it acts is called the pressure center or center-of-pressure. The sum of the differential moments hdF about an axis at 0 in figure 1 can be set equal to the resultant times the distance h_o to give:

$$h_o F = \int h \, dF \tag{5}$$

Substituting dF from equation 1 and F from equation 2 into equation 5 yields:

$$h_o = \frac{\gamma \sin \alpha \int h^2 dA}{\gamma \sin \alpha \int h \, dA} \tag{6}$$

The integral $\int h^2 dA$ is the second moment of area A about an axis at 0 and is called the moment of inertia, I_o. Substituting $A \bar{h}$ from equation 3 and Io into equation 6 gives:

$$h_o = \frac{I_o}{A\bar{h}} \tag{7}$$

Substituting the transfer equation $I_o = \bar{I} + A \bar{h}^2$ into equation 7 gives:

$$h_o = \frac{\bar{I} + A\bar{h}^2}{A\bar{h}} = \bar{h} + \frac{\bar{I}}{A\bar{h}} \tag{8}$$

where $\bar{I}$ is the moment of inertia of area A about its own center of gravity, and $\bar{h}$ is the distance from the axis to the center of gravity. Equation 8 shows that the pressure center is always below the center of gravity by an amount equal to the eccentricity, e, where:

$$e = h_o - \bar{h} = \frac{\bar{I}}{A\bar{h}} \tag{9}$$

Since $\bar{I}$ for a rectangle is $wh^3/12$, where w is the width of the rectangle, and the center of gravity is at h/2, the location of the pressure center from equation 8 for a submerged rectangular surface is:

$$h_{or} = \frac{h}{2} + \frac{\frac{wh^3}{12}}{(wh)\frac{h}{2}} = \frac{h}{2} + \frac{h}{6} = \frac{2}{3}h \tag{10}$$

from the top of the surface or 1/3h from its bottom (see fig. 2). Similarly, for a submerged triangular surface with the base on top, h_{ot} = 1/2h. Thus, since the pressure center is at the 1/2 point for the triangular portion, below the pivot axis, of a trapezoidal gate and at the one third point for the rectangular portion of the gate below the axis, the pressure center for a trapezoidal gate as a whole is slightly above the one third point.

The hydrostatic pressure distribution and gate schematic diagram shown in figure 2 illustrates the center-of-pressure principle upon which the gates operate. Notations as used in this article are also shown in the figure. At the balanced-force depth, the opposing gate moments resulting from friction and the pressure forces above and below the pivot axis are approximately equal. If the pivot axis is located at the point where the resultant acts, the forces tending to rotate the gate in opposite directions are balanced. Tests have shown that the pivot needs to be slightly below the pressure point to offset friction forces and the effect of the rubber seals. Therefore, the hydrostatic balanced-force depth varies from the actual tripping depth, y_d, and is slightly lower. When the upstream water depth exceeds the balanced-force depth, the resultant force rises above the pivot point and creates a net clockwise moment, as viewed from the perspective of figure 2, to open the gate. Because friction and retarding forces are variable, the gates may not open exactly when the tripping depth is reached but usually open within about ±2 cm (3/4 in.) of the design tripping depth.

Rectangular gates can be designed for automatic operation by adding a counterbalance to automatically return them to their closed positions. Because of the proportionately short moment-arm distance between the pivot and the bottom of the gate, a weight-type counterbalance must be quite large and is usually not feasible. The preferred method is to use a constant-force spring counterbalance. By changing the size of the spring and/or its connecting linkages, within limits, either a closing or an opening moment can be applied to the gate to

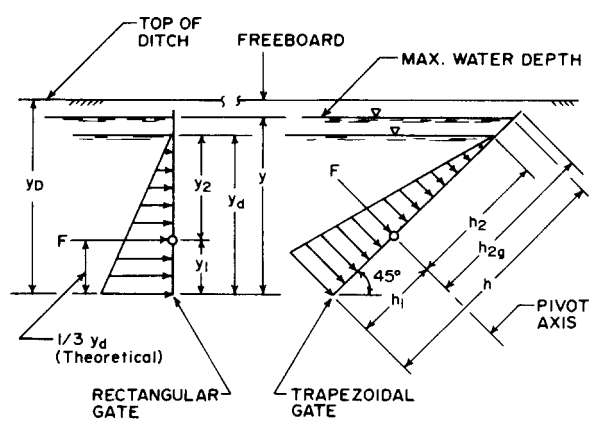

Figure 2–Hydrostatic and notation diagram for center-of-pressure gates.

change the water depth at which it opens. Counterbalancing is more feasible on vertically oriented, rectangular gates than on trapezoidal gates because the disproportionate size and weight of trapezoidal gates above the pivot axis in relation to that below the axis, when placed at an angle in the ditch, creates a relatively large opening moment.

In operation, pressure gates are usually used with companion drop-closed gates. When a drop-closed gate is released to its closed position, water diversion to a field or another ditch ceases through that gate opening and the water depth in the ditch increases. When the water level rises to the gate-tripping depth, the pressure gate opens. The gate remains open as long as water flows over it. When water drains from the channel, a counterbalanced gate automatically returns to its closed position.

Gate Design

General Criteria

The primary design parameters are the gate-tripping depth and the distance from the bottom of the gate to the pivot axis. The gate-tripping depth is determined first and several factors are considered in determining its value. Approximately 5 cm (2 in.) minimum rise in the ditch water surface is needed for gate tripping. Thus, the normal operating depth and freeboard must be known. Just prior to gate opening, when the upstream water depth approaches the gate-tripping depth, the gate is in a near-balanced condition and opens slightly. At this point, water begins leaking past the rubber seals. Thus, to avoid this transition state during normal ditch operation, the gate-tripping depth is designed at least 5 cm (2 in.) above the normal water depth. As can be seen by the schematic diagram shown in figure 3, because of a trapezoidal gate's shape, the higher the pivot axis, the wider the gate opening will be. Thus, for these gates, the design gate-tripping depth should be as large as feasible to maximize the opening width for minimum flow restriction.

If the normal freeboard is not sufficient to provide 5 cm (2 in.) of water level rise and still maintain adequate freeboard above the gate-tripping depth, then the gates can be designed with a trip latch to control them with a timer or other means. In this case, the gate-tripping depth is arbitrarily designed near the normal water depth with an allowance for an increase in depth if needed so the gate will open positively when the latch is released. This also avoids the leaking transition state just prior to gate opening. A gate trip latch is also used when it is desired to control gate opening precisely by time or by exact water surface level. The center-of-pressure principle is used to decrease the force on a gate-tripping linkage by placing the pivotal axis at approximately the one-third point instead of using a drop-open gate hinged at its bottom. With the total pressure force on the gate distributed on both sides of the pivot axis, only the unbalanced force is resisted by the trip linkage rather than the full water pressure force. Thus, a lighter trip linkage can be used to simplify gate tripping, particularly with relatively large gates.

Pressure gates can also be used in water-spreading operations and as safety gates to admit flood water into water-spreading basins or into drainage and waste channels when the water level in ditches or canals exceeds a

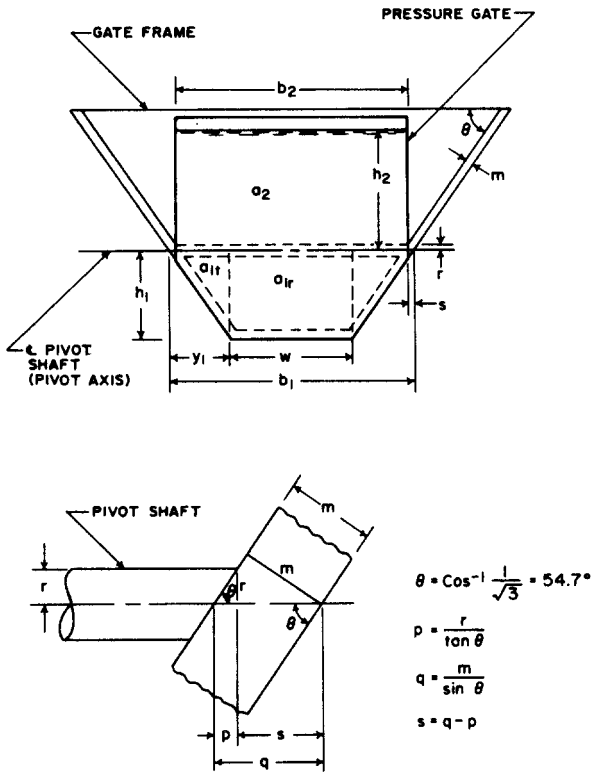

Figure 3–Definition sketch of a pressure gate.

predetermined depth. When used for this purpose, they can be designed to completely drain a channel or they may be designed with a shallow water-tripping depth and placed at a higher elevation in the channel bank to keep the maximum water surface within certain limits. They can be used either with or without a counterbalance. If used without a counterbalance, they must be manually reset after opening. They should be checked periodically to make certain they remain free and operable in case of an emergency.

Rectangular Gates

Laboratory tests were conducted with prototype rectangular gates to determine the location of the pivot axis for a given gate-tripping depth. The theoretical pivot location is one-third of the gate-tripping depth above the bottom of the gate as shown in figure 2. Earlier tests indicated that the pivot axis could be located at approximately 0.32 times the desired gate-tripping depth, y_d, above the bottom of the gate (Humpherys, 1969a, 1969b). Later tests indicated that for vertical, rectangular gates, friction and the effect of the gate seals in retarding gate opening was about the same for most gates. The depth at which the gates opened ranged from approximately 2.5 to 4 cm (1 to 1.6 in.) above the theoretical opening depth. Therefore, a better criterion from which to calculate the pivot height, y_1, is to reduce the value of the design tripping depth, y_d, by a constant amount, for the purpose of calculating y_1. Thus:

$$y_1 = 1/3\,(y_d - C) \qquad (11)$$

where an average value of c is 3.3 cm (1.3 in.). This places

the pivot axis slightly below the one-third point of the actual opening depth and (y_d - C) represents the hydrostatic balanced-force depth. Rectangular gates can be counterbalanced with springs so that the gate-tripping depth can be adjusted to compensate for variations in C. Constant-force Negator* springs work well for counterbalancing and the attachment linkage can be adjusted to change the gate-tripping depth within a range of approximately ±2.5 cm (1 in.).

Trapezoidal Gates

For gates used in trapezoidal concrete-lined ditches, two factors increase the clockwise (fig. 2) moment. As shown in figure 3, the gate area, a_1, below the pivot is trapezoidal-shaped and smaller than that of a_2, above the pivot. Therefore, the counterbalancing hydrostatic force on the lower portion of the gate is smaller than that on a_2 and this results in a larger net clockwise moment. Secondly, the gates are placed at an angle of 45° in concrete-lined ditches. Thus, the greater weight of the larger upper portion of the gate itself, with its stiffening members, creates a larger moment than the corresponding moment of a_1. Because these factors increase the clockwise moment, the pivot axis must be higher than that for vertical, rectangular gates to provide an offsetting counterclockwise moment. The value of y_1 varies with gate size, primarily gate width, and is determined from:

$$y_1 = k\, y_d \qquad (12)$$

The value of k was approximately 0.395 for gates with a bottom width of 30 cm (12 in.), and depths ranging from 25 cm (10 in.) to 66 cm (26 in.). The larger gates are made from heavier materials with larger stiffening or reinforcing members. The value of k for a gate with a bottom width of 46 cm (18 in.) and a design tripping depth of 66 cm (26 in.) was 0.385. The value of k can be adjusted if needed, using the procedures presented later, to develop a design in which the algebraic sum of the opposing gate moments at the design gate-tripping depth is approximately zero.

Design Procedure for Trapezoidal Gates

A generalized procedure was developed for designing trapezoidal pressure gates such as those used in concrete-lined ditches. Design parameters are shown in figures 2 and 3 and are also defined in the appendix. General equations for determining the gate moments were developed using equations 4, 8, and 9 and are given in the appendix. These equations apply to gates placed at an angle of 45° with the bottom of the ditch. Steps in the design procedure include:

1. Determine the ditch cross-sectional geometry, normal water depth, and maximum water depth, y, for the given field conditions.
2. Determine the gate-tripping depth, y_d.
3. Determine the location of the pivot axis, y_1, using eq. 12.
4. Calculate the sloping distances, $h = \sqrt{2}\ y$.
5. Determine pressure gate width and height. The gate width, b_2, must be narrower than b_1 to allow the gate to clear the pivot shaft in its open position. The calculated width, b_1, must be reduced by approximately 2.4 s, which also allows for construction clearances, where s is determined as shown in figure 3.
6. Determine pressure gate dimensions including its side and bottom flanges; and, as a first trial, the weight of the gate and its stiffening members for calculating its moments. The gates tested were made from 1.5 mm (16 gauge) thick galvanized-steel sheet metal.
7. Calculate the algebraic sum of the moments using the generalized equations shown in the appendix. If the sum exceeds approximately ±5% of the moment, M_1, of the lower portion of the gate, then a second trial can be made by adjusting the value of k. If the sum of moments is positive, the gate will open before the water level reaches y_d and the value of k can be increased; if negative, k is decreased. If the gate is released by a latch, the design is not critical but it has to assure that the gate will open with the available water depth above the value of y_d used in the design, i.e., that the sum of moments is positive with a margin of safety.
8. Check the unit stresses for the assumed sizes of stiffening members and pivot shaft. Pivot shafts for the two largest gate sizes used in the field tests were made from galvanized steel pipes with 25 mm (1 in.) nominal diameter for the large gate where y_d = 66 cm (26 in.) and w = 46 cm (18 in.), and 13 mm (1/2 in.) for the smaller gate, where y_d = 51 cm (20 in.) and w = 30 cm (12 in.).
9. Determine the dimensions of the gate frame and its structural members. The sides of the structural angle that forms the top of the gate frame were 51 mm (2 in.) wide for the large gate and 38 mm (1 1/2 in.) for the smaller gate. The side angles of the gate frame were 38 mm (1 1/2 in.) wide for the large gate and 32 mm (1 1/4 in.) for the small gate.

A design example is shown in the appendix.

Construction

The largest trapezoidal gates were constructed as shown in figure 4. For the sheet metal pressure gates tested, the side flanges were 2.5 cm (1 in.) wide. In lieu of an end flange, a 32 mm x 32 mm x 3.2 mm (1 1/4 in. x 1 1/4 in. x 1/8 in.) stiffening angle was bolted to the upper edge of the gate. When the gate opens, its corners strike the sloping sides of the ditch and this stiff member prevents the gate from bending under the weight of the falling water. The stiffening members on the face of the gate, as shown in figure 4, were 32 mm x 32 mm x 3.2 mm (1 1/4 in. x 1 1/4 in. x 1/8 in.) angle iron for a gate in a 76 cm (30 in.) deep ditch with 48 cm (18 in.) bottom width and one 25 mm x 25 mm x 3.2 mm (1 in. x 1 in. x 1/8 in.) and two 19 mm x 19 mm x 3.2 mm (3/4 in. x 3/4 in. x 1/8 in.) angles for a gate in a 61 cm (24 in.) deep ditch with 30 cm (12 in.) bottom width. The gate is mounted as shown in view D-D of figure 4 so that it is above the steel angle members of the gate frame the thickness of the rubber seals under the

*Ametek Hunter Spring Products, Sellersville, PA 18960. Company names are shown for the benefit of the reader and do not imply endorsement or preferential treatment of the company or products shown by the U.S. Department of Agriculture.

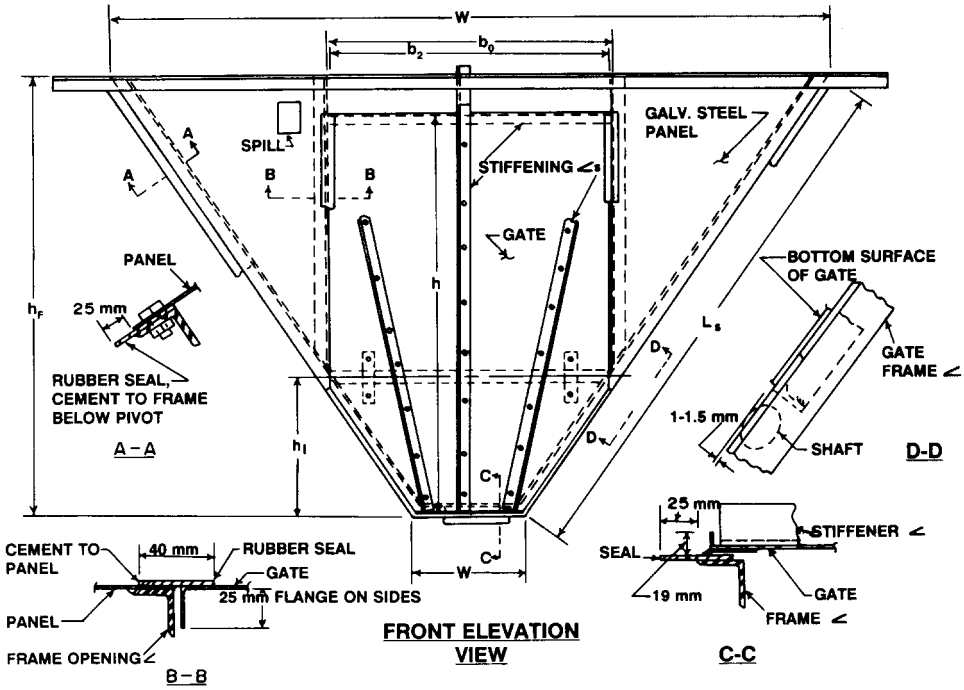

Figure 4–Generalized construction diagram of a trapezoidal center-of-pressure gate and frame.

lower lip of the gate, which is about 1.5 mm (0.06 in.). This is about the same thickness as that of the galvanized sheet panel for which the gate must be raised above the frame angles as shown in view B-B, to form a good seal. Therefore, the frame is made so that its members lie in a plane. Thus, the top surface of the sheet metal panels which are on top of the frame angle members will be in a plane with the top or upstream surface of the gate as shown in view B-B. The continuous rubber seal around the perimeter of the gate frame in contact with the ditch lining prevents leakage past the gate. A rubber seal is also attached to the underneath side of the gate below the pivot which seats on top of the seal on the lower gate frame as shown in view C-C of figure 4. The flange on the lower portion of the pressure gate is bent upward so that its base or beginning point is set back about 8 mm (5/16 in.) toward the inside of the gate as shown in view C-C to allow the gate seal to seat on top of the frame perimeter seal. The seals are cemented with a superior quality weather-strip adhesive†. The galvanized sheet metal gate should not be heated or welded because it will warp and cause leaks. Some leakage may occur at the ends of the pivot axis, but this is usually negligible if the rubber seals are attached with care.

The gate latch and catchment container used for tripping the gate are shown in the diagram of figure 5 and the photo of figure 6.

Field Applications

Trapezoidal Gates

Center-of-pressure check gates were designed for a semi-automated level basin system near Delta, UT, and a similar border system at Eskdale, UT. Two gates installed in a 76 cm (30 in.) deep supply ditch for the basin system have been used for three years. The 22 gates shown in figure 7 were installed in a 61 cm (24 in.) deep ditch for the

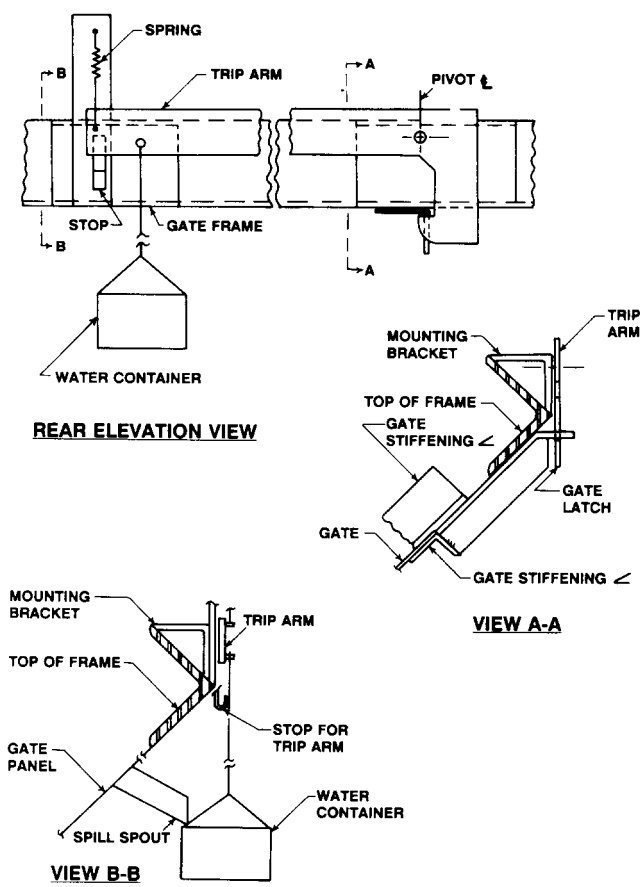

Figure 5–Diagram of gate-tripping arrangement with a water container.

†Part No. 8,Master Chemical Corporation, Memphis, TN 38118.

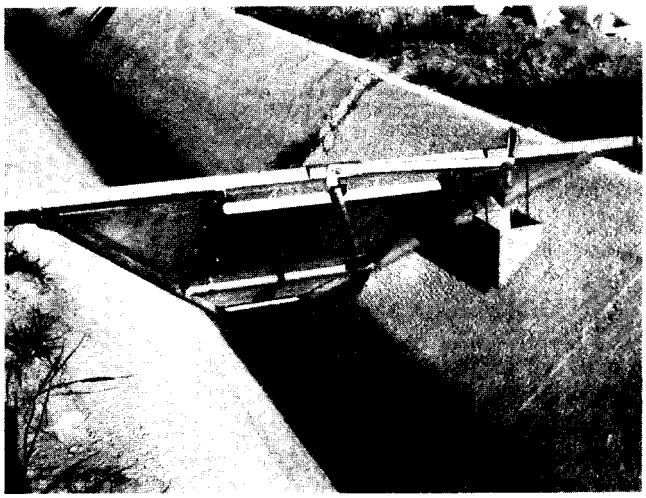

Figure 6–Rear view of a pressure gate. Note: The gate is now designed without the foot shown in the photo on the upper rear side of the gate.

border system in 1990. In both systems, semi-automatic drop-closed gates are used at the ditch outlets into the basins and borders. The turnout gates are either timed or are controlled by feedback from water sensors located near the end of the field. When the turnout gates close to terminate irrigation of their respective lands, a checkgate in the supply ditch must open to pass water downstream to the next set of basins or borders. Pressure gates were chosen as checks because they can open automatically with an increment of water level rise, and thus avoid the need for an additional timer or controller for each check gate. Since the amount of freeboard is limited at both locations, the gates were designed with a latch to release the gates at an exact water depth with a minimum water level rise. The gate latch is activated by the weight of water which spills through a notch near the top of the gate with its overflow crest at the desired gate-tripping depth. A container, suspended on the back side of each gate, catches the water as it spills from the notch (fig. 6). The container fills rapidly when the upstream water level reaches the notch crest, and the weight of water in the container releases the gate latch. Drain holes allow water to drain from the container after an irrigation.

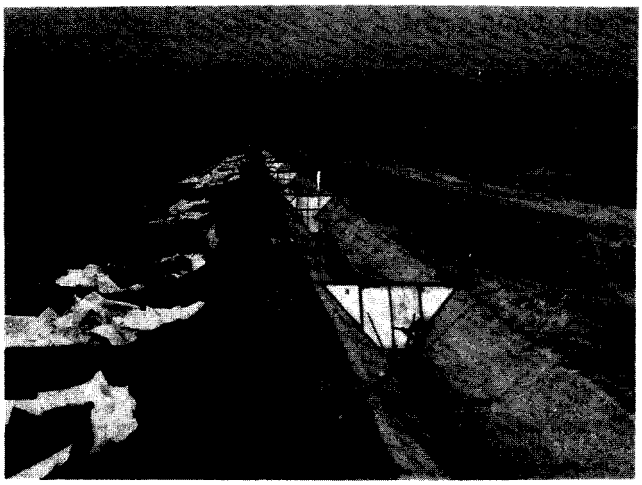

Figure 7–View of a semi-automated border irrigation system using center-of-pressure check gates.

Trash in the water tended to collect on the gates of the basin system and sometimes caused leakage. Irrigation water, unless it comes directly from a well or reservoir, should always be screened to remove trash, especially for automated systems. Trash was not a problem after the first irrigation with the border system because the water came from wells. Wind-blown weeds that collected in the ditch during the winter were removed prior to the first irrigation.

Premature gate opening due to the initial surge of water following the opening of an upstream check gate could be an operational problem in some cases with gates not equipped with a latch. Should it occur, this problem can be solved by placing a baffle or low obstruction in the ditch about 15 to 20 cm (6 to 8 in.) high and approximately 1 m (3 ft) upstream from the gate to dampen the surge wave.

Except when trash was present, the gates performed well with little leakage. The latch and trip linkage need to be inspected and lubricated occasionally to assure that they work freely. The water-spill, gate-release system was effective and reliable.

Rectangular Gates

Rectangular pressure gates equipped with constant-force return springs were used as field turnout gates in another basin system. These were constructed with the flange at the top of the gate bent upward about 30° so as to deflect the gate downward when water was flowing over them. Otherwise, with a high field tailwater level in a border or basin, the return spring tended to keep them from fully opening to a horizontal position. On the other hand, a 90° flange bent to the underneath side at the end of a gate helps create a suction, along with surface tension, which holds the gate open until all of the water has drained from a ditch (Humpherys, 1969a). This can be an advantage in some situations such as when it is used as a check in a supply ditch. Rectangular gates have performed well mounted in portable wooden or metal frames (Reynolds, 1968).

Summary

Center-of-pressure gates, sometimes referred to as pressure gates, can be effectively used in automatic and semi-automatic irrigation systems. They are constructed so as to utilize the principle of hydrostatic pressure distribution for operation. They are made to pivot on a shaft located at approximately the one-third point above the bottom of the gate. They are designed so that the gate opening and closing moments are balanced when the ditch water level is just below the gate opening depth; an increment of water level rise is utilized for gate opening. Laboratory and field tests were conducted with prototype gates to determine the actual location of the pivot axis for a desired corresponding opening depth. For rectangular gates, the pivot is located just below the one-third point, while for trapezoidal gates designed for use in concrete-lined ditches, the pivot is located above the one-third point. A generalized design procedure was developed for designing trapezoidal-shaped pressure gates. Rectangular gates can be equipped with a counterbalance for automatic operation, while trapezoidal gates are usually used semi-automatically with a latch which is tripped to release them to their open position. General design and construction criteria are presented.

Pressure gates are being used in a 76 cm (30 in.) deep concrete-lined supply ditch of a level basin irrigation system and in a 61 cm (24 in.) deep ditch of a border system. In both systems, they are used with companion semi-automated drop-closed field turnout gates. The turnout gates are released by timers or by feedback from water sensors. When they close, the water surface elevation in the ditch rises until it reaches the spill crest of a notch near the top of the pressure gate. Water from the spill is caught in a container and its weight is used to release the gate.

REFERENCES

Bowman, C.C. 1969. Semi-automation of irrigation. *Proc. Int. Comm. on Irrig. and Drain.*, 7th Congress, Mexico City, Question 24, R 19: 24.271 - 24.275.

Humpherys, A.S. 1969a. Automatic mechanical irrigation gates. *Proc. Int. Comm. on Irrig. and Drain.*, 7th Congress, Mexico City, Question 24, R 17: 24.251-24.261.

———. 1969b. Mechanical structures for farm irrigation. *J. Irrig. and Drain. Div. Am. Soc. Civil Engr.* 95(IR4):463-479.

Reynolds, W.N. 1968. Automatic surface irrigation in Hawaii. *Am. Soc. Civil Engr. Irrig. and Drain. Div. Spec. Conf., Automation of Irrigation and Drainage Systems*, 201-218. Phoenix, AZ.

APPENDIX

SUMMARY OF GATE DESIGN PARAMETERS AND MOMENT EQUATIONS.

These are for trapezoidal-shaped pressure gates placed in concrete-lined ditches at an angle of 45° with the ditch bottom. The moments are taken about the pivot axis or centerline of the pivot shaft. (See figs. 2 and 3 for definition of terms.)

y = vertical distances; also represents the gate height and the maximum water depth

h = counterpart sloping distances = $\sqrt{2}\, y$

y_D = ditch depth

w = bottom width of both ditch and gate

y_d = design gate-tripping depth

y_1 = vertical distance from bottom of gate to the pivot axis:
$y_1 = k\, y_d$ where the value of k is approximately 0.395 when w = 30 cm (12 in.) and 0.385 when w = 46 cm (18 in.) for gates with y_d between 25 cm (10 in.) and 66 cm (26 in.) (eq. 12).

y_2 = $y_d - y_1$

b = general designation for gate width

b_1 = $w + 2y_1$

b2 = $b_1 - 2.4\, s$ where $s = m/\sin\theta° - r/\tan\theta°$ (fig. 3)
m = leg width of the frame side support angle
r = outside radius of the pivot shaft
θ = 54.7°

b_{2g} = width of sheet metal for gate = $b_2 + 2f$ where f is the width of each side flange

b_o = width of pressure gate opening in gate frame = b_2 + 5 mm (0.2 in.)

M_{1r} = moment, due to water pressure, of rectangular portion of a_1 about pivot axis
$= w\gamma\, y_1^2\, [2/3\, y_1 + y_2]$

M_{1t} = moment, due to water pressure, of triangular portions of a_1 about pivot axis
$= 1/3\, \gamma\, y_1^3\, [y_1 + 2_{y2}]$

M_1 = $M_{1r} + M_{1t}$ (-)

M_2 = moment, due to water pressure, of a_2 about pivot axis (+)
$= 1/3\, \gamma\, y_2^3\, b_2$

M_{1gr} = moment, due to gate weight, of rectangular portion of a_1 about pivot axis
$= \frac{w_s}{2\sqrt{2}}\, w h_1^2$

where

w_s = weight per unit area of steel used in the gate

M_{1gt} = moment, due to gate weight, of triangular portions of a_1, about pivot axis = $\frac{w_s}{6}\, h_1^3$

M_{1g} = $M_{1gr} + M_{1gt}$ (-)

M_{2g} = moment, due to gate weight, of a_2 about the pivot axis (+)
$= \frac{w_s}{2\sqrt{2}}\, b_{2g}\, h_{2g}^2 + M_A$
where $h_{2g} = h - h_1 + 5$ cm (2 in.) and M_A is the moment about the pivot axis of the angle bolted on the upper edge of the gate

$M_{<s}$ = moments about the pivot axis of stiffening angles on face of gate

h_F = sloping height of gate frame
$= \sqrt{2}\, [y_D + 50 \text{ mm } (2 \text{ in.})]$

W = top width of gate frame
$= w + 2\, [y_D + 50 \text{ mm } (2 \text{ in.})]$

L_s = length of side of gate frame
$= \sqrt{3}\, [y_D + 50 \text{ mm } (2 \text{ in.})]$

DESIGN EXAMPLE FOR A TRAPEZOIDAL CENTER-OF-PRESSURE CHECK GATE

Given: Concrete-lined ditch with 1:1 side slopes

bottom width, w	= 30.5 cm (12 in.)
ditch depth, y_D	= 61.0 cm (24 in.)
normal water depth	= 53 cm (21 in.)
maximum depth, y	= 56 cm (22 in.)
freeboard	= 5 cm (2 in.)

Determine design tripping depth y_d:

Since there is not enough depth above the normal operating depth to provide a 5 cm (2 in.) depth increase without reducing the freeboard to less than the minimum, a latch must be used. If the normal operating depth were 51 cm (20 in.) or less, then the gate could be designed with y_d = 56 cm (22 in.) and an increment of water level rise used for tripping. With a latch, selection of y_d is not critical but should be as large as feasible to maximize gate width. For the example design, use y_d = 53 cm (21 in.). This will provide a safety margin below the maximum depth for a positive gate-tripping moment.

The design procedure is shown in the following tabulation using k = 0.395 as a first trial and the gate stiffening members and shaft sizes as noted in the text for this size gate. The design parameters were calculated from the equations shown in the previous appendix section and in the order shown in the tabulation.

Design parameter	Numeric value		Design parameter	Numeric value	
	cm	in.		Nm	# in.
y	56	22	M_{1r}	61	543
h	79.2	31.1	M_{1t}	26	231
y_d	53.3	21	M_1 (-)	87	774
y_1	21	8.3	M_2 (+)	72	634
h_1	29.7	11.7	M_{1gr}	1.1	10
y_2	32.3	12.7	M_{1gt}	0.5	4.6
b_1	72.5	28.6	M_{1g} (-)	1.6	14.6
s	3	1.17	M_{2g} (+)	15.7	139
b_2	65.3	25.8	$M_{1<s}$ (-)	0.9	8.1
b_{2g}	70.3	27.8	$M_{2<s}$ (+)	1.6	14.2
h_{2g}	54.5	21.4	ΣM	-0.26	-9.5
			5% M_1	4.3	39

Since the numeric value of ΣM is <5% of M_1, the calculated value of y_1, and therefore h_1, is satisfactory. The gate structural members used in this example were the same as those noted in the text for this size gate for which the unit stresses were checked previously. Unit stresses for assumed structural members used in the design of different size gates would need to be checked.