SEMIAUTOMATION OF IRRIGATED BASINS AND BORDERS: I. SINGLE-FUNCTION TURNOUT GATES

A. S. Humpherys

ABSTRACT. *Two types of single-function, drop-closed gates for semiautomating irrigated basin and border systems are described. Gate design, construction, and operational information are presented. Gates for both rectangular and pipe turnout openings were tested and evaluated in a 24 ha (60 acre) near-level basin system. Gates for pipe turnouts were also tested in a 10 ha (25 acre) border system. The gates provide greater operator convenience, and in the border system, even on a manual basis, increased water storage efficiency and reduced irrigation set time and labor. Systems and devices for controlling the gates are presented in another article.* ***Keywords.*** *Surface, Irrigation, Gates, Semiautomation, Ditch outlets.*

The most common reasons for using semiautomation are to provide greater convenience for the irrigator and to reduce labor requirements and fertilizer leaching. Basin and border systems use relatively large supply streams that require precise set times to optimize irrigation efficiency and to prevent dike overtopping, excessive runoff, and deep percolation. Operational problems can be reduced by semiautomating an irrigation system using timers or by using sensors located near the lower end of a field to provide feedback to terminate irrigation of a given border or basin. Semiautomation is generally preferred by irrigators over automated systems for its simplicity and lower cost. Semiautomated systems require manual input to either turn water into the system or to reset or reposition the structures and/or control devices. Some older systems either do not have permanent structures or are in need of repair and upgrading. An added benefit of semiautomation for these systems is improved system facilities and water control.

Basin and border irrigation systems are used under many different conditions. Water may be supplied from either open channels or pipelines. Automation principles, design considerations, and alternative methods of automating these systems were previously discussed (Humpherys, 1986). Semiautomated gates for open channel systems have been described by various investigators including Bowman (1969), Evans (1977), Haise et al. (1980), Hart and Borelli (1970), Humpherys (1969), and Reynolds (1968).

Fields with side slopes that exceed approximately 0.3% sometimes use ditches that are stair-stepped to provide an elevation difference of 100 to 150 mm (4 to 6 in.) between basins or borders or groups of borders irrigated together as described by Taylor et al. (1982). These relatively low-cost systems use single-function drop-closed check gates in the supply ditch and weir-crest turnouts into the field. Single-function gates are defined as those which either open or close only. Systems with less slope sometimes use gates in pairs—a check gate in the ditch and a companion field turnout gate(s) in the side of the ditch. However, most basin and border systems in the United States have low-gradient supply channels because fields most feasibly irrigated with these systems have very little side slope. Thus, check gates in the head ditch are usually spaced with more than one irrigation set in between. For these systems, dual-function gates, which both open and close, are required between the ditch checks.

Semiautomated gates are not generally available commercially. A research project was undertaken to develop and test gates and related devices. The single-function gates described in this article were developed in conjunction with a trip-cord gate release system. They are being field tested in a 24-ha (60-acre), near-level basin system near Delta, Utah (fig. 1), and a 10-ha (25-acre)

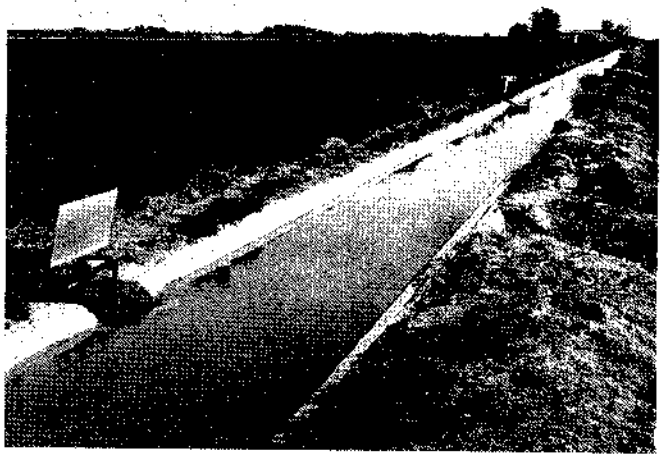

Figure 1–View of head ditch with turnout gates for irrigating level basins near Delta, Utah.

Article has been reviewed and approved for publication by the Soil and Water Div. of ASAE. Presented in part at ASAE and Irrigation Association, Third National Irrigation Symposium, 28 October to 1 November 1990, Phoenix, Arizona.

Names of products or companies are shown for the benefit of the reader and do not imply endorsement or preferential treatment of the company or products shown by the USDA-Agricultural Research Service.

The author is **Allan S. Humpherys**, ***ASAE Member Engineer***, Agricultural Engineer, USDA-Agricultural Research Service, Soil and Water Management Research, Kimberly, Idaho.

Figure 2–Head ditch with semiautomated gates for border irrigation at Eskdale, Utah.

border irrigation system at Eskdale, Utah (fig. 2). The purpose of this article is to describe two types of drop-closed, single-function, semiautomated gates for use in basin and border irrigation systems. Design and construction information obtained from field tests is also presented. Dual-function gates for basin and border systems are described in another article (Humpherys, 1995a). Systems and devices for controlling the gates are described in a third article (Humpherys, 1995b).

Gate Descriptions

A drop-closed gate is held open by a cord, chain, cable, or, as shown in figure 3, by a latch or gate release device. The gate drops by its weight to stop the flow of water when the gate latch or trip is released. Water pressure on the upstream side holds the gate tightly closed. Each gate must be sturdily mounted and sufficiently strong to resist the momentum force of moving water when it suddenly closes. Drop-closed gates were installed in the sides of concrete-lined ditches at flow outlets or turnouts into basins or borders. They can also be permanently or portably mounted on headwalls or bulkheads and used as checks in lined or unlined supply ditches. The gate is tripped or released to its

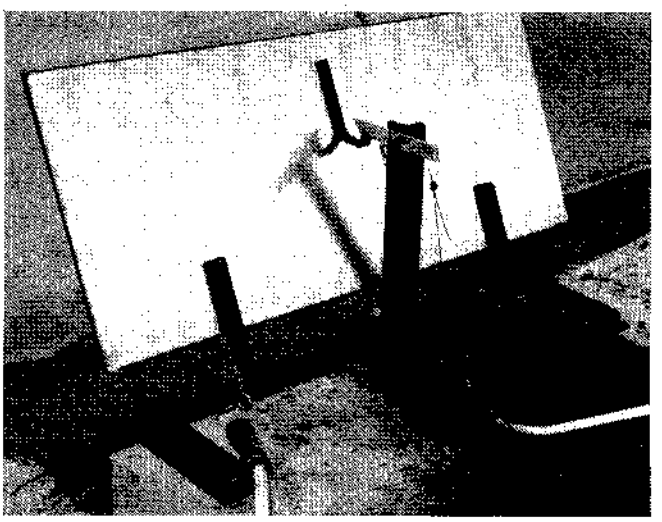

Figure 3–Rear view of an earlier drop-closed gate with a trip-cord release system installed in a lined ditch turnout.

closed position by a mechanical timer, electric solenoid, or a trip cord attached to an adjacent gate. The gates must be manually reset for the next operation prior to each irrigation; thus, they are semiautomatic. The two types or configurations described are (1) those for rectangular openings (fig. 3), and (2) those for pipe turnouts.

Rectangular Gates

These gates were designed for rectangular turnout openings and may replace original manually operated sheet metal slides. They are usually installed in vertical slots and caulked in place. The hinge point is behind the gate panel to provide a closing moment on the panel. This is an improvement over previous gates which hung partially open until the water depth was sufficient to close them. Thus, they tended to leak at shallow depths. The offset hinge is not needed for drop-closed gates used as checks in the main ditch channel, such as those described by Taylor et al. (1982).

Gate Construction. Standard sizes of turnout openings are often used in a given locality and contractors normally use these established sizes in construction. For different field conditions or stream sizes, the turnout opening size may need to be determined. The flow velocity leaving the turnout should be less than about 0.9 m/s (3 ft/s) to prevent excessive erosion.

Rectangular single-function gates consist of a frame with a 1.5 mm (16 gage) galvanized sheet metal panel on the upstream side hinged to the top of the frame (fig. 3). The frame, shown in figure 4, has a 38 or 51 mm (1 1/2 or 2 in.) steel angle on each side. One leg of the angle fits into a gate mounting slot in the side of the turnout and provides a bearing surface for the gate panel and seal. The bottom of the frame is a steel channel. The top of the frame is a 4.8 mm (3/16 in.) thick angle with 32 or 38 mm (1 1/4 or 1 1/2 in.) legs. A plan view of the top of the gate is shown in figure 5. One of two offset hinges attached to the top of the frame is shown in figure 6. An upright post attached to the top of the frame provides a mounting base for the latch and other gate-tripping components as shown in figure 5 (see also figure 3). When a trip-cord gate release system is

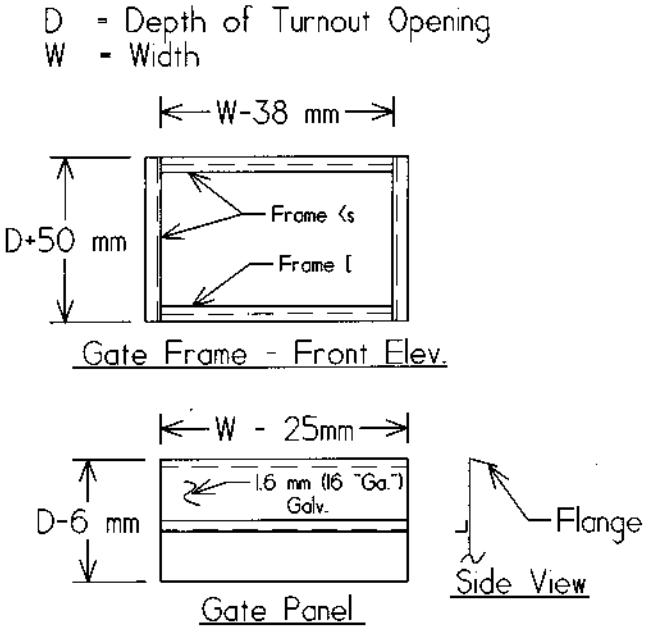

Figure 4–Diagrams of the frame and panel for a rectangular drop-closed gate.

used, support brackets for the trip-cord conduits are attached to the gate frame as shown in figures 5 and 7.

The gate panel has a flange at its top edge (figs. 4 and 6). A stiffening angle located approximately one-third the gate height from the bottom of the panel may also be needed for gates wider than about 70 cm (28 in.). The stiffening angle is sized to resist the static and momentum forces of water on the gate panel as the gate closes. The stiffener can be a standard steel angle or one formed from 1.5 mm (16 gage) galvanized sheet steel.

Two types of frames were used. The frame shown in figure 4 was used for single function gates. Frames for dual-function gates were sometimes used for drop-closed gates to provide construction uniformity between gates. These frames consisted of standard 32, 38, or 51 mm (1 1/4, 1 1/2, or 2 in.) steel channel for both sides and the bottom with a 38 × 38 × 4.8 mm (1 1/2 × 1 1/2 × 3/16 in.) steel angle welded on top. Steel angles, 3.2 mm (1/8 in.) thick, are bolted or welded to the sides of the dual-function gate frame to support it in the ditch openings. One leg of each side angle, 51 mm (2 in.) wide, fits into a slot in the turnout opening. The width of the other leg corresponds to the width of the steel channel used for the frame. The side

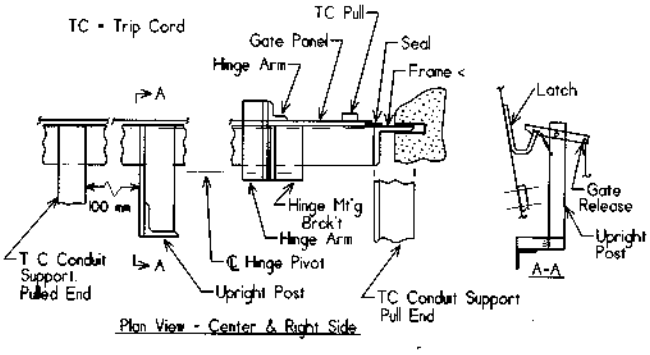

Figure 5–Plan view of a portion of a rectangular drop-closed gate showing appurtenances attached to the top of the frame.

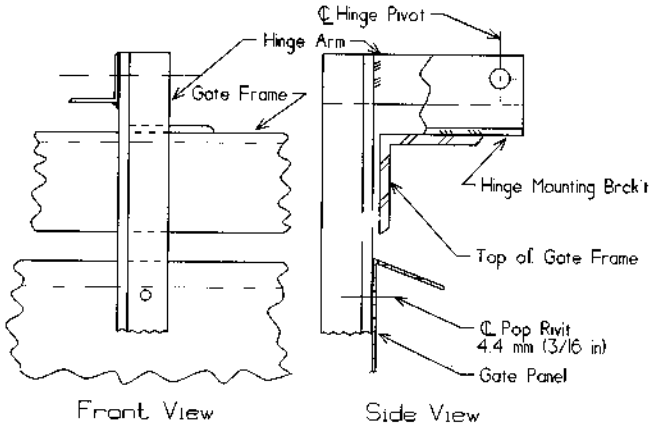

Figure 6–Diagram of an offset hinge to provide a gate-closing moment.

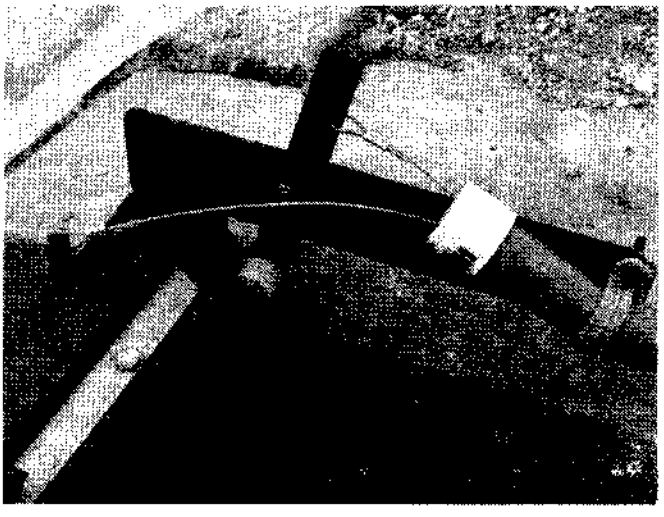

(a)

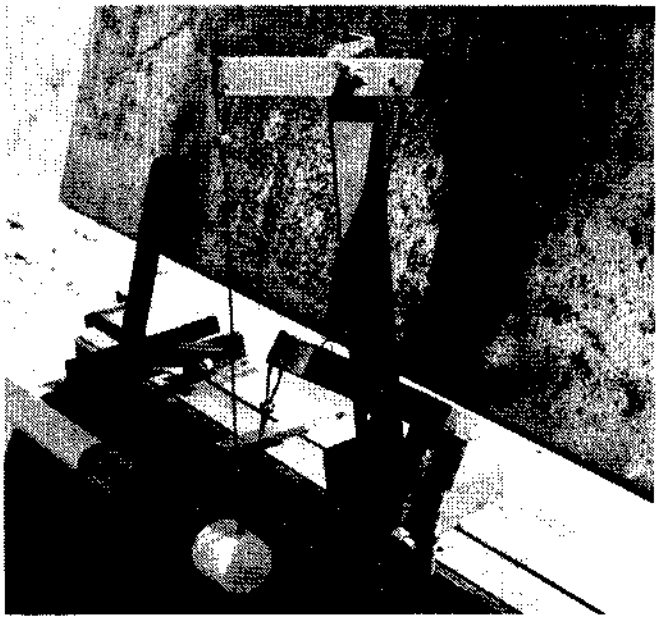

(b)

Figure 7–Photo showing supports for trip-cord conduits: (a) "pull" end, and (b) "pulled" end.

angles can also be formed from 1.5 or 1.9 mm (16 or 14 gage) galvanized steel.

Latches. Two gate latches were used. The type shown on the gate in figure 3 is used where wind is not a significant problem. Gate panels are raised to a near-vertical position to minimize the weight or force the latch must support. The gate panel is automatically latched when raised to its reset position. The gate latch engages the square corners of a notch on the latch finger. The latch is held in place against both the weight of the panel and mild wind forces on the panel by a spring. The near-vertical position may be a problem if a steady wind blows against the face of the gate panel so it cannot close. Wind was not a significant problem where the latch spring was sufficiently strong. Where wind is a problem, or because of personal preference, the gate panel can be suspended in a lower, more horizontal position by a cord, cable, or chain used with the latch shown in figure 8. The latches shown in figures 3 and 8 are used with a trip-cord gate release system and need to be adapted or modified for a specific timer configuration and operation, when a timer is used.

Gate Seals. An extruded neoprene rubber seal attached to the gate panel to prevent leakage is shown in figure 9a. This type of seal is preferred, but satisfactory results were obtained with the seal shown in figure 9b. Other similarly shaped seals of approximately 50 durometer hardness could also be used. A nonreinforced, flat, 0.8 mm (1/32 in.) thick neoprene or butyl rubber seal, shown in figure 9c, was also used. A nylon-reinforced rubber seal of the same thickness was not satisfactory because the nylon absorbed water and caused the seal to wrinkle. The two seals shown in figures 9a and 9b sometimes have some curvature in the lengthwise direction as a result of the extrusion process. Therefore, straight extrusions must be specified so they can conform to the straight sides of the gate panel without wrinkling. The seals were cemented to the underside of the panel with a superior quality weather strip adhesive (part no. 8, Master Chemical Corporation, Memphis, Tenn.), as shown in figure 10. All of the seals prevented leakage when the gates hung free and the irrigation water was free from trash. When trash was present, it sometimes lodged between the panel and the gate frame when the gate closed. All automated or semiautomated systems served by canals should be equipped with trash/weed screens to remove debris that could create problems when an irrigator is not present. Leakage was much less with this system than with the original manual slide gates, which pleased the farmer.

Installation. The gates were placed into preformed slots in the sides of the ditch turnout openings. Minor concrete chipping was required where the bottom of the gate did not rest squarely on the bottom of the turnout. The gates can also be attached to concrete, metal, or wood headwalls in an irrigation ditch.

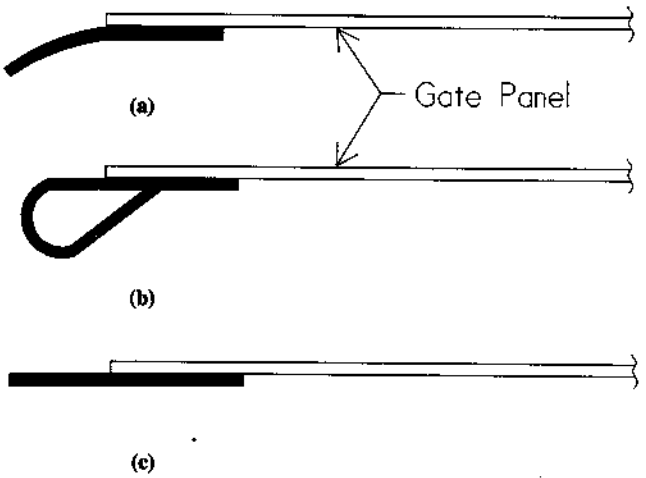

Figure 9–Diagram of extruded rubber strips used as gate seals: (a) Extrusion no. 1169; Rubbercraft Corp. of California, Torrance, Calif.; (b) extrusion no. ZX-10086; Minor Rubber Co., Bloomfield, N.J.; and (c) nonreinforced, 0.8 mm (1/32 in.) thick neoprene or butyl rubber strip.

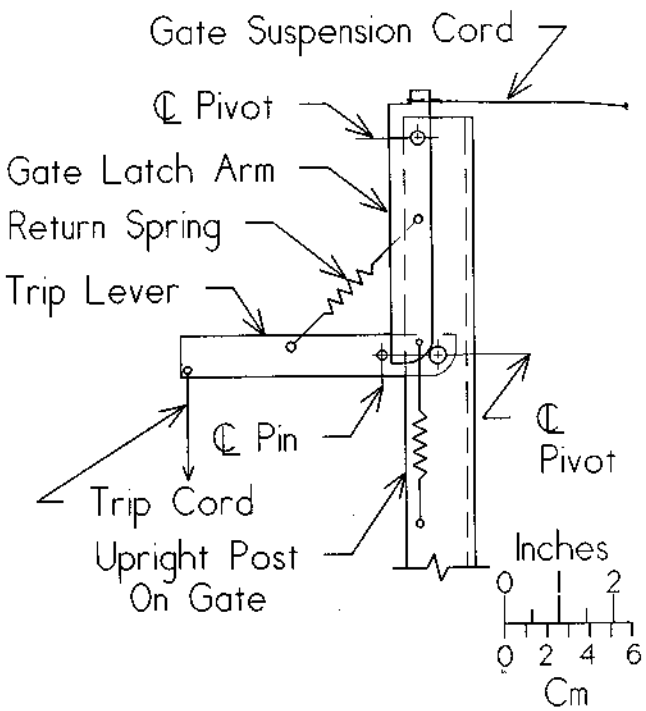

Figure 8–Diagram of an alternative gate release linkage for a drop-closed gate released by trip cord.

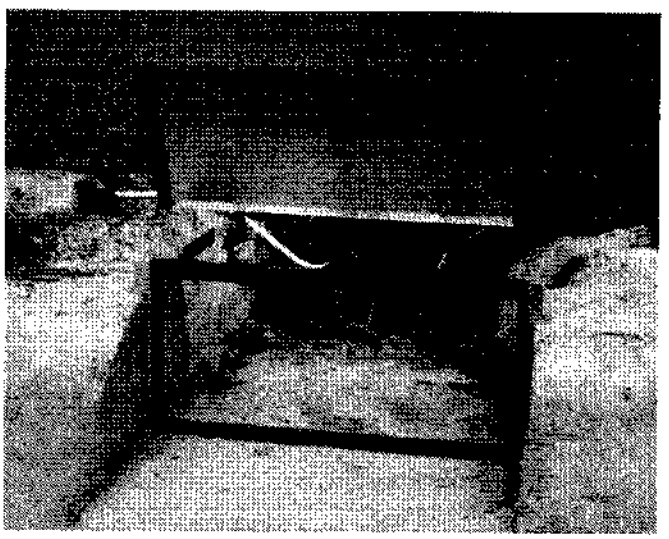

Figure 10–Front view of drop-closed gate in a ditch turnout showing the gate frame which is caulked in place, and the rubber gate seal around the edges of the gate panel.

The gates were sealed in the turnout opening by caulking the upstream sides and bottom of the gate frame. Several different caulking materials were tested, including marine caulk for underwater use, acrylic, tub and tile adhesive, clear elastomeric indoor/outdoor, silicone sealant, butyl, and asphalt. The best would be marine caulk, but it is quite expensive. Since the gates are submerged intermittently, caulking intended for intermittent submergence was used, and appeared satisfactory. After two years' use and exposure, most caulking looked good. However, one type of acrylic caulk tended to pull away from the gate. An advanced "lifetime" acrylic material (Seamseal 2002, Darworth Co., Avon, Conn.), which has been used successfully on boats, performed well and was low cost. The butyl tended to pull away from the concrete in some places. The silicone caulk was not satisfactory because the acidic fumes released during curing corroded the metal gates. The polyseamseal material for home and boat and a clear elastomeric caulk (DAP Inc., Dayton, Ohio) both looked good. The asphalt caulk was also good after two years' use. However, this material tends to crack after several years' exposure. It is a low cost material, and where dust and silt form a protective coating, its performance may be satisfactory.

Pipe Outlet Gates

Pipe outlet gates were designed to retrofit new and/or existing pipe turnouts for semiautomation. They were tested with two types of turnouts. Turnouts for the basin system (fig. 11) were 350 mm (14 in.) diameter conventional, prefabricated, metal slide gates placed near the bottom of the concrete ditch when the ditch lining was installed. The manually-operated gate slides, with handles, were removed when the drop-closed gates were installed. The circular gated opening extends through the ditch lining into 460 mm (18 in.) diameter steel pipe which conveys irrigation water through the ditch bank to the field surface as shown in figure 12. Turnouts for the border system consist of 380 mm (15 in.) diameter concrete pipe installed in the ditch as shown in figure 13. The plain pipe inlet is elliptical.

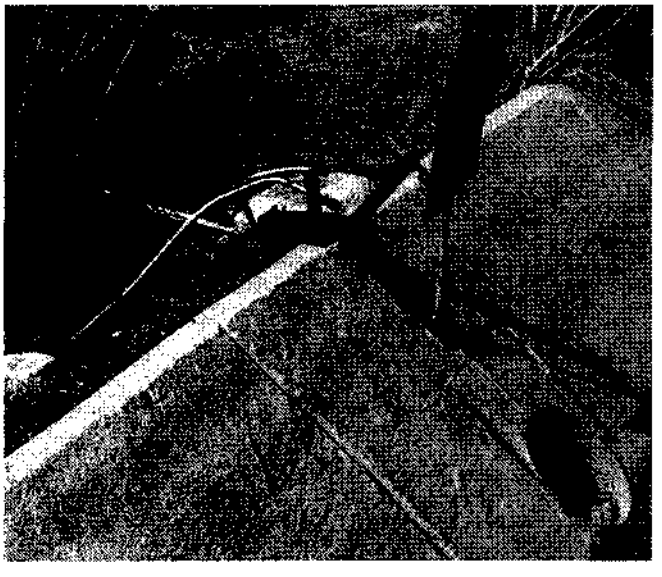

Figure 11–Drop-closed gate for a pipe turnout into a level basin.

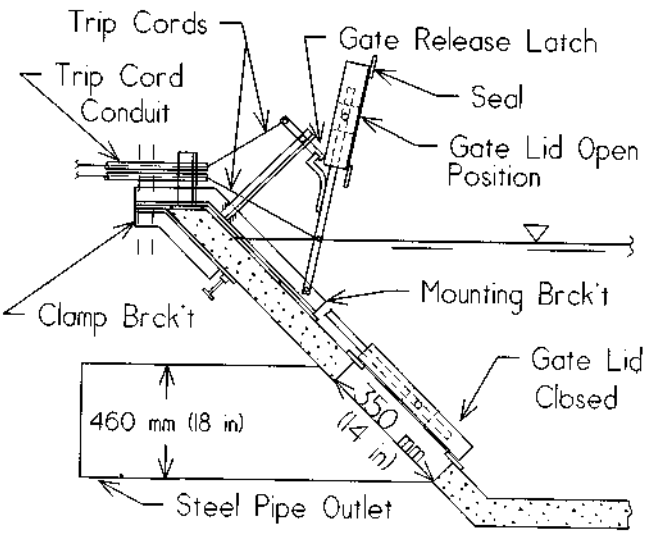

Figure 12–Diagram of a pipe turnout into a level basin with a drop-closed gate which replaced the original slide gate.

The gate lid, 1.5 mm (16 gage) galvanized steel, is attached to the gate arm as shown in figure 14. The lid is sized to fit the turnout opening and is approximately square for a circular gated opening and vertically rectangular for an elliptical opening. It is about 75 mm (3 in.) larger in both horizontal and vertical directions than the turnout opening. The extra size provides space to attach a rubber seal on the underside and for some lateral movement of the gate over the opening for self-positioning. The longest mounting angle centered on the lid (fig. 14) extends across the full height of the opening and serves as a stiffening member to resist the impact force of water against the lid when it closes. The center bolt attaching this angle to the lid is an eyebolt to which a chain or rope can be attached to raise the gate to an open position or to suspend it in a horizontal reset position. The gate arm extends about 75 mm (3 in.) beyond the lid pivot point to keep the lid approximately parallel to the arm; otherwise, the lid could tilt up and not coincide with the opening during gate closure.

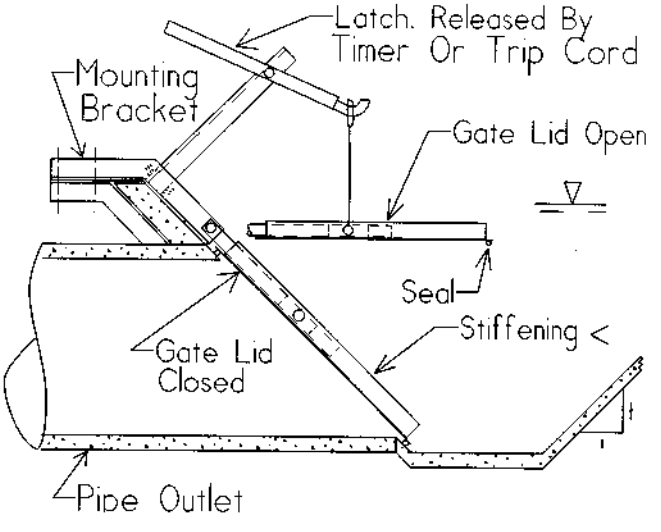

Figure 13–Diagram of a concrete pipe border turnout (elliptical opening) equipped with a drop-closed gate.

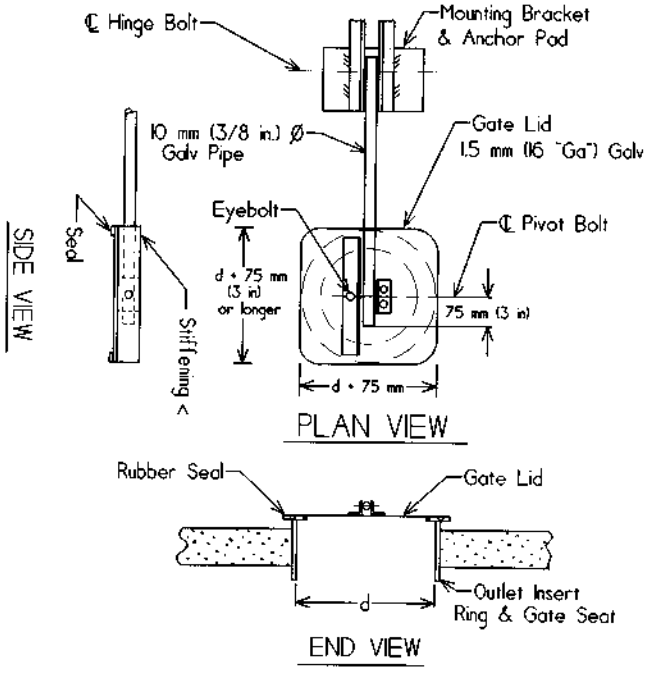

Figure 14–Diagram of a drop-closed gate for a circular pipe outlet.

Drop-closed gates for pipe turnouts are mounted on brackets attached to the upper edge of the ditch lining as shown in figures 12, 13, and 15. The mounting bracket is made from two pieces of 38 × 38 × 3 mm (1 1/2 × 1 1/2 × 1/8 in.) steel angle shaped to fit the top edge of the ditch lining in both a right- and left-hand configuration. The upper ends of the two angle pieces are welded to an 8 mm (3/16 in.) thick steel plate which rests on the top edge of the ditch lining (fig. 15). The bottom ends of the bracket angles are similarly welded to a steel pad which rests on the side of the ditch (figs. 11 and 12). The space between the bracket angles corresponds to the outside diameter of the pipe arm to which the gate lid is attached. During final assembly and installation of the bracket, the anchor pad is rigidly attached to the ditch lining with a high quality construction adhesive. The mounting bracket is attached to the edge of the ditch lining with a clamp bracket as shown in figures 12, 13, and 15. The clamp bracket is made from steel angles and is bolted to the upper end of the mounting bracket.

For turnout openings fitted with prefabricated gates, the gate insert ring formed a seat for the original slide gate. It also serves as the seat for the drop-closed gate (figs. 11 and 12). A flat butyl or neoprene rubber strip cemented to the underside of the lid forms a seal against the gate seat. For previously ungated turnouts (fig. 13) the gate lid seats on the concrete surface surrounding the turnout opening. For this turnout, an extruded rubber section such as shown in figure 9b is used for the seal. A soft, flexible rubber tube approximately 8 mm (5/16 in.) diameter can also be used. The concrete surface surrounding the opening should be ground or mortared smooth for good seal contact. The rubber seals are attached to the gate lids with a superior quality weatherstrip adhesive.

The type of gate latch used to suspend a gate in its open position varies with the gate and its release system. The latch and gate suspension shown in figure 15 is similar to that used on the rectangular drop-closed gates (fig. 3). The latch is released by a trip cord activated by the closing of an adjacent gate. Gates controlled by solenoid-actuating timers and sensors use an electric solenoid to actuate the latch finger (fig. 16) to close the gate. When the ditch water level was above the opening, gates for the elliptical-shaped openings were suspended in a horizontal position (fig. 13) to improve the flow characteristics at the opening inlet. For this condition, the gate lid was held open by a chain or small cable attached to a mechanical timer arm or to a latch finger actuated by a trip cord.

Field Tests

The gates were installed for testing in ditches regularly used for irrigation on two different farms. General operation of these systems is discussed in another article (Humpherys, 1995b).

Basin System

The gates for this system were installed in 1987 and 1988 and have been in use since that time. The irrigation supply ditch (fig. 1) has zero slope with a 0.06 m (0.2 ft) drop between each four basins and serves basins on both sides of the ditch. Water is distributed simultaneously

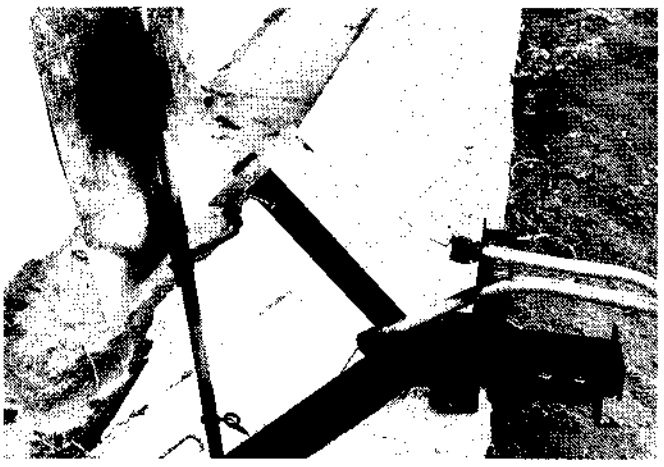

Figure 15–Photo of a drop-closed gate for a pipe turnout showing the mounting bracket, gate latch, and trip-cord release.

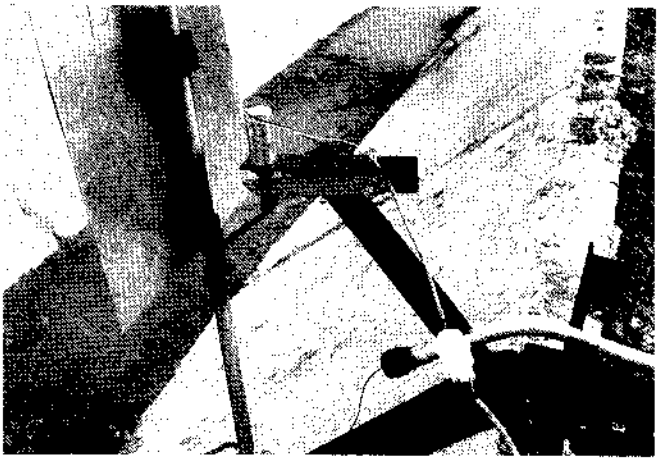

Figure 16–Electric solenoid-released gate latch.

through four turnouts into each basin. The supply stream size for the 4 ha (10 acre) basins varies from about 255 to 310 L/s (9 to 11 cfs). The gate on the first turnout of a group of four is released to a closed position by a solenoid controlled by a mechanical timer or a water sensor. The other three gates in the group are closed through a trip-cord system from the first gate. The gates are manually reset prior to the next irrigation. A check gate (Humpherys, 1991) was installed in the supply ditch between the first pair of basins. Twelve rectangular gates, which serve three basins, were installed in openings near the top of one side of the ditch while seven gates, which serve two basins, were installed over pipe outlets located near the bottom of the ditch on the opposite side. Alfalfa is the principle crop grown, and the soil texture and depth are uniform between basins. Thus, all of the basins have the same irrigation schedule and can be irrigated sequentially in the same general irrigation.

Border System

Twenty-two drop-closed gates for the border system (fig. 2) were installed in 1990 and 1991. The ditch has an average slope of 0.086%, and a check gate (Humpherys, 1991) is used between each pair of turnouts. The existing ditch did not have turnouts and the farm operator installed a 380 mm (15 in.) diameter precast concrete pipe turnout for each 12 m (40 ft) wide border. He plans to combine two borders into a single border at a later date when his water supply is increased by the addition of another well. Concrete pipe was used because saline soil conditions prohibited the use of metal pipes. Plastic pipe was not considered because of the pipe's expansion and contraction characteristics. The precast pipe was installed with non-shrink concrete mortar. A gate was installed at each turnout opening as illustrated in figure 13. A mechanical timer closes the first gate of a pair, while the second gate will be released by a trip cord from the first when two borders are combined into one. Timers were not available nor field leveling completed, so this system was operated manually during the first two seasons.

Results and Conclusions

Results and conclusions from field tests of the single-function drop-closed gates follow.

In use for five and six years, performance of the gates in the basin system was satisfactory. Modifications were made to the gates installed during the initial testing period to improve performance.

The first rectangular gates did not have an offset hinge and did not close completely until water reached a certain depth in front of them. They leaked when the ditch was used for conveyance between irrigations and the water was not checked. Offsetting the hinge pivot point so the gate's weight provided a closing moment solved this problem.

Several different seals were used on the gates. The extruded rubber seal shown in figure 6a, used on the rectangular gates, sealed the best, and approached 100% sealing except when trash lodged beneath the gate. Flat rubber seals used beneath pipe turnout gate lids with a gate seat, such as those for the basin turnouts, sealed essentially 100% except when trash was present. Sealing was much better than with the sheet metal slides formerly used in the rectangular outlets on the turnouts of the basin system. Sponge-rubber weatherstrip seals used on the first gates of the basin system sealed well for two or three years, then deteriorated and wore away. Thin, flat *nonreinforced* rubber strips extending from the edges of the rectangular gates sealed quite well. Those made from nylon-reinforced butyl did not seal well; the nylon supporting material absorbed water and caused the seal to wrinkle.

Wind-blown weeds occasionally caught beneath the closing gate lids and panels causing some leakage. Though not extensive, this was the cause of most leakage in all systems. A trash screen is recommended for most automated systems. Water for the border system is pumped directly from wells. A trash screen would not likely help for this system because the weeds were blown into the ditch downstream from where they would be removed by a screen. The weeds were manually removed from the ditch before the first irrigation of the season.

The top edge of the gate panel for the rectangular gates of the basin system bent slightly over time because of the water's momentum force on the closing gate panel. The remedy was a wider flange at the top of the gate and/or adding a stiffener on the front side of the gate as shown in figure 4.

Maintenance required consisted of checking the gate seals and latch or release system at the beginning of each irrigation season, lubricating the hinge and pivot points, checking the gate caulking and paint, and removing the timers during the winter for service as needed. Weeds around the turnout openings should be treated with a herbicide rather than by burning to avoid damage to the gates and trip-cord system.

Once closed, the gates do not need to be reopened during normal operation except in emergencies; however, this type of gate is difficult to open when the ditch is full of water.

Several different caulking materials were evaluated. Those which performed the best were an advanced lifetime acrylic and a polyseamseal material.

With the improved border system, irrigation was accomplished in approximately 50% less time than previously and with an average water storage efficiency of 73% for two years, with the system operated manually. Irrigation labor for the basin system was minimal before semiautomation so the primary advantage of semiautomation was convenience for the irrigator, the irrigation sets could be changed without an irrigator present.

Gates for the basin system were constructed as experimental prototypes with many modifications made during their development. Consequently, realistic cost figures are not available for these. Costs for the 22 drop-closed gates for the pipe outlets of the border system, constructed in a small shop, were determined. The 1990 material cost for these was about U.S. $27 per gate, excluding the cost of the timers. Fabrication labor for the gates was approximately 5 h/gate for a 380 mm (15 in.) diameter turnout. Total costs for smaller gates such as those used in the basin system may be less. The timers were older, rehabilitated units which are no longer available. A single-function electronic timer for use with an electric solenoid-operated gate release has recently been developed (Irrigation Systems Company of Western Colorado, Fruita,

Colo.). A 24-h mechanical timer (Frank W. Murphy Manufacturer, Inc., Tulsa, Okla.) and associated electric circuit for controlling a solenoid-actuated gate release is described by Humpherys (1995b).

ACKNOWLEDGMENT. The author gratefully acknowledges the contributions of Roger Brown, Machinist, for his helpful ideas and fabrication of the experimental gates; and the cooperation of O. Dean Anderson and Howard Clayton, operators of the farms on which the field tests were conducted.

REFERENCES

Bowman, C. C. 1969. Semiautomation of irrigation. In *Proc. Seventh Congress on Irrigation and Drainage*, Q 24, Rpt. 19, 24.271-24.275. Mexico City.

Evans, R. G. 1977. Improved semiautomatic gates for cut-back surface irrigation systems. *Transactions of the ASAE* 20(1):105-108, 112.

Haise, H. R., E. G. Kruse, M. L. Payne and H. R. Duke. 1980. Automation of surface irrigation: 15 years of USDA Research and Development at Fort Collins, Colo. USDA Production Research Report No. 179.

Hart, W. E. and J. Borelli. 1970. Mechanized surface irrigation systems for rolling lands. Univ. of Calif. Water Resource. Ctr. Contr. 133.

Humpherys, A. S. 1969. Mechanical structures for farm irrigation. *Am. Soc. Civil Eng. J. Irrig. and Drain Div.* 95(IR4):463-479.

———. 1986. Automated farm surface irrigation systems worldwide. Special Pub., International Commission on Irrigation and Drainage (ICID). New Delhi, India: United India Press.

———. 1991. Center-of-pressure gates for irrigation. *Applied Engineering in Agriculture* 7(2):185-192.

———. 1995a. Semiautomation of Irrigated Basins and Borders: II. Dual-function turnout gates. *Applied Engineering in Agriculture* 11(1):75-82.

———. 1995b. Semiautomation of irrigated basins and borders: III. Control elements and systems operation. *Applied Engineering in Agriculture* 11(1):83-91.

Reynolds, W. N. 1968. Automatic-surface irrigation in Hawaii. In *Proc. Am. Soc. Civil Eng. Irrig. and Drain. Div. Spec. Conf.*, 201-218. Phoenix, Ariz.

Taylor, A. R., D. H. Ryde and D. G. Aldridge. 1982. Automation of New Zealand border strip irrigation. *Transactions of the ASAE* 25(1):120-123, 129.